CLADE

Rowan 3 Standard & Low Noise

Heating ASHP

Installer Manual

PD-Rowan 3-03

Version: 1.1

S

Contents

Safety Precautions 4
Transportation 5
Installation 6
Pipe Installation 6
Electrical Wiring 6
Transportation and Repairs 7
1 Technical Specification 8
1.1 Construction Table 8
1.2 Refrigerant Information 9
1.2.1 Gas Leak Detection ..... Error! Bookmark not defined.
1.3 Operating Ranges ..... Error! Bookmark not defined.
1.3.1 Heating ..... Error! Bookmark not defined.
1.4 Pressure Independent Control Valves 14
1.4.1 Primary Pump Control 14
2 Unit Installation 15
2.1 General Installation notes 15
2.1.1 Site Selection Criteria 15
2.1.2 Structural Requirements 16
2.1.3 Minimising Vibration 16
2.1.4 Charging lines 17
2.1.5 Pressure Relief Valve Refrigerant Side 18
2.1.6 Condensate 18
2.1.7 Freezing Prevention 18
2.2 Fire Safety 19
2.2.1 Rowan 3 Standard Noise (SN) 19
2.2.2 Rowan 3 Low Noise (LN) 19
2.3 Water quality 20
2.3.1 General Requirements 20
2.3.2 New Systems 20
2.3.3 Existing Systems 20
2.3.4 Water Filter 20
2.3.5 Anti-freeze Solutions 21
2.3.6 Minimum Water Quality Requirements for Rowan 3 Units 21
2.4 Delivery & Unpacking 22
2.5 Structural Loading Points ..... Error! Bookmark not defined.
2.5.1 Structural Loading Points Standard Noise` ..... Error! Bookmark not defined.
2.5.2 Structural Loading Points Low Noise` ..... Error! Bookmark not defined.
2.6 Lifting Centers ..... Error! Bookmark not defined.
2.6.1 Lifting Centers Standard Noise ..... Error! Bookmark not defined.
2.6.2 Lifting Centers Low Noise ..... Error! Bookmark not defined.
3 Installation Space Requirements 27
3.1 Dimensions Standard Noise 27
3.2 Dimensions Low Noise 28
3.2.1 Single Unit Installation 29
3.2.2 Multiple Unit Installation 30
3.2.3 Vertical Clearance 32
3.2.4 Wall Heights 34
3.3 Service Connections 35
3.3.1 Standard Noise 35
3.3.2 Low Noise 35
4 Piping and Hydraulics 36
4.1 Piping Connections 36
4.1.1 Pipe Connection Sizes 37
4.1.2 Header Kits 38
4.1.3 Freezing Protection 38
4.2 Defrost 39
4.2.1 Minimum Free Flowing Water Content 39
4.2.2 Optimal Buffer Sizing 39
4.2.3 Buffer Design Considerations 40
4.3 System Pressure 41
4.3.1 Safety Valves 41

S

4.3.2 Bursting Disc ..... Error! Bookmark not defined.
4.4 Frost Protection 41
5 Electrical Installation 42
5.1 Electrical data 42
5.1.1 Supply voltage 400/3/50+N 42
5.1.2 Mains Supply Installation 42
5.1.3 Power Supply Details 42
5.1.4 Terminal Block Arrangement 43
5.1.5 Maximum Cable Sizes 44
5.1.6 Control Connections 44
6 Controls 45
6.1 Controls Overview ..... Error! Bookmark not defined.
6.3 Multiplex Controls ..... Error! Bookmark not defined.
6.3.2 Multiplex System Network Diagram ..... Error! Bookmark not defined.
6.3.3 Heat Pump Data ..... Error! Bookmark not defined.
6.4 BMS Control ..... Error! Bookmark not defined.
6.5 Local control ..... Error! Bookmark not defined.
7 Wiring Diagrams 53
7.1 Rowan 3 Power Wiring 53
8 Pre-Commissioning Checklist 55
8.1 Pre-requisites 55

Safety Precautions

- Thoroughly read the following safety precautions prior to use.
- Observe these precautions carefully to ensure safety.

⚠ **WARNING**	Indicates a risk of death or serious injury
⚠ **CAUTION**	Indicates a risk of injury or structural damage
⚠ **IMPORTANT**	Indicates a risk of damage to the unit or other components in the system

General

⚠ WARNING

Do not use refrigerant other than the type indicated in the manuals provided with the unit and on the nameplate.
Doing so may cause the unit or pipes to burst, or result in explosion or fire during use, during repair, or at the time of disposal of the unit. It may also be in violation of applicable laws.
CLADE ENGINEERING SERVICES LTD cannot be held responsible for malfunctions or accidents resulting from the use of the wrong type of refrigerant.
Do not install the unit in a place where large amounts of oil, steam, organic solvents, or corrosive gases, such as sulfuric gas, are present or where acidic/alkaline solutions or sprays containing Sulphur are used frequently.
These substances can compromise the performance of the unit or cause certain components of the unit to corrode, which can result in refrigerant leakage, water leakage, injury, electric shock, malfunctions, smoke, or fire.
Do not try to disable the safety features of the unit or make unauthorized setting changes.
Forcing the unit to operate by disabling the safety features of the devices such as the pressure switch or the temperature switch, making unauthorized changes to the switch settings, or using accessories other than the ones recommended by CLADE ENGINEERING SERVICES LTD may result in smoke, fire, or explosion.
To reduce the risk of fire or explosion, do not use volatile or flammable substances as a heat carrier.
To reduce the risk of burns or electric shock, do not touch exposed pipes and wires.
To reduce the risk of shorting, current leakage, electric shock, malfunctions, smoke, or fire, do not splash water on electric parts.
To reduce the risk of electric shock, malfunctions, smoke or fire, do not operate the switches/buttons or touch other electrical parts with wet hands.
To reduce the risk of electric shock and injury from the fan or other rotating parts, stop the operation and turn off the main power before cleaning, maintaining, or inspecting the unit.
Before cleaning the unit, switch off the power.
To reduce the risk of injury, keep children away while installing, inspecting, or repairing the unit.
Children should be supervised to ensure that they do not play with the appliance.
To reduce the risk of burns or frost bites, do not touch the refrigerant pipes or refrigerant circuit components with bare hands during and immediately after operation.
This appliance is not intended for use by persons (including children) with reduced physical, sensory or mental capabilities, or lack of experience and knowledge, unless they have been given supervision or instruction concerning use of the appliance by a person responsible for their safety.
Keep the space well ventilated. Refrigerant can displace air and cause oxygen starvation.
Always replace a fuse with one with the correct current rating.
The use of improperly rated fuses or a substitution of fuses with steel or copper wire may result in fire or explosion.
If any abnormality (e.g., burning smell) is noticed, stop the operation, turn off the power switch, and consult your dealer.
Continuing the operation may result in electric shock, malfunctions, or fire.
Properly install all required covers and panels on the terminal box and control box to keep moisture and dust out. Dust accumulation and water may result in electric shock, smoke, or fire.
Consult an authorized agency for the proper disposal of the unit.

S

⚠ CAUTION

Do not operate the unit without panels and safety guards properly installed.
To reduce the risk of injury, do not sit, stand, or place objects on the unit.
Do not connect the makeup water pipe directly to the potable water pipe. Connecting these pipes directly may cause the water in the unit to migrate into the potable water and cause health problems.
To reduce the risk of adverse effects on plants and animals, do not place them where they are directly exposed to discharge air from the unit.
Do not install the unit on or over things that are vulnerable to water damage.
Condensation may drip from the unit.
To prevent environmental pollution, dispose of brine in the unit and cleaning solutions according to the local regulations.
It is punishable by law not to dispose of them according to the applicable laws.
The water heated by the heat pump is not suitable for use as drinking water or for cooking it may cause health problems or degrade food.
In areas where temperature drops to freezing during the periods of non-use, blow the water out of the pipes or fill the pipes with anti-freeze solution. Not doing so may cause the water to freeze, resulting in burst pipes and damage to the unit or the furnishings.
The model of heat pump unit described in this manual is not intended for use to preserve food, animals, plants, precision instruments, or art work.
To reduce the risk of injury, do not touch the heat exchanger fins or sharp edges of components with bare hands.
Do not place a container filled with water on the unit.
If water spills on the unit, it may result in shorting, current leakage, electric shock, malfunction, smoke, or fire.
Always wear protective clothing when touching electrical components on the unit.
Several minutes after the power is switched off, residual voltage may still cause electric shock.
To reduce the risk of injury, do not insert fingers or foreign objects into air inlet/outlet grills.
To reduce the risk of injury, wear protective gear when working on the unit.
In areas where temperature drops to freezing, use an anti- freeze circuit and leave the main power turned on to prevent the water in the water circuit from freezing and damaging the unit or causing water leakage and resultant damage to the furnishings.
Use clean tap water.
The use of acidic or alkaline water or water high in chlorine may corrode the unit or the pipes, causing water leakage and resultant damage to the furnishings.
In areas where temperature can drop low enough to cause the water in the pipes to freeze, operate the unit often enough to prevent the water from freezing.
Periodically inspect and clean the water circuit.
Dirty water circuit may compromise the unit's performance or corrodes the unit or cause water leakage and resultant damage to the furnishings.

Transportation

⚠ WARNING

Lift the unit by using the designated lifting eyes on each side of the unit. Support the unit securely at these four points to keep it from slipping and sliding.
If the unit is not properly supported, it may fall and cause personal injury.

⚠ CAUTION

To reduce the risk of injury, products weighing 20 kg or more should be carried by two or more people.

S

Installation

⚠ WARNING

Do not install the unit where there is a risk of leaking flammable gas.
If flammable gas accumulates around the unit, it may ignite and cause a fire or explosion.
Properly dispose of the packing materials.
Plastic bags pose suffocation hazard to children.
The unit should be installed only by personnel certified by Clade Engineering Ltd according to the instructions detailed in the Installation/Operation Manual.
Improper installation may result in refrigerant leakage, water leakage, injury, electric shock, or fire.
Any additional parts must be installed by qualified personnel.
Take appropriate safety measures against wind gusts and earthquakes to prevent the unit from toppling over and causing injury.
Periodically check the installation base for damage.
If the unit is left on a damaged base, it may fall and cause injury.
Be sure to install the unit horizontally, using a level.
If the unit is installed at an angle, it may fall and cause injury or cause water leakage.
Remove packing materials from the unit before operating the unit. Note that some accessories may be taped to the unit. Properly install all accessories that are required.
Failing to remove the packing materials or failing to install required accessories may result in refrigerant leakage, oxygen starvation, smoke, or fire.
The unit should be installed on a surface that is strong enough to support its weight.
As an anti-freeze, use ethylene glycol or propylene glycol diluted to the specified concentration.
The use of other types of anti-freeze solution may cause corrosion and resultant water leakage. The use of flammable anti-freeze may cause fire or explosion.

Pipe Installation

⚠ WARNING

To prevent explosion, do not heat the unit with refrigerant gas in the refrigerant circuit.

⚠ CAUTION

Check that no substance other than the specified refrigerant (R744) is present in the refrigerant circuit.
Infiltration of other substances may cause the pressure to rise abnormally high and cause the pipes to explode
To prevent damage from water due to condensation, properly insulate all pipes.
Check for refrigerant leakage at the completion of installation.
Piping work should be performed by a competent person according to the instructions detailed in the Installation Manual.
Improper piping work may cause water leakage and damage.

Electrical Wiring

⚠ WARNING

To reduce the risk of wire breakage, overheating, smoke, and fire, keep undue force from being applied to the wires.
Properly secure the cables in place and provide adequate slack in the cables so as not to stress the terminals.
Improperly connected cables may break, overheat, and cause smoke or fire.
To reduce the risk of injury or electric shock, switch off the main power before performing electrical work.
To reduce the risk of current leakage, overheating, smoke, or fire, use properly rated cables with adequate current carrying capacity.
Keep the exposed part of cables inside the terminal block.
If an exposed part of the cable come in contact with each other, electric shock, smoke, or fire may result.
All electric work must be performed by a qualified electrician according to the local regulations, standards, and the instructions detailed in the Installation Manual.
Capacity shortage to the power supply circuit or improper installation may result in malfunction, electric shock, smoke, or fire.
To reduce the risk of electric shock, smoke, or fire, install an inverter circuit breaker on the power supply to each unit.
Use properly rated breakers and fuses (inverter breaker, Local Switch <Switch + Type-B fuse>, or no-fuse breaker).
The use of improperly rated breakers may result in malfunctions or fire.
Proper grounding must be provided by a licensed electrician. Do not connect the grounding wire to a gas pipe, water pipe, lightning rod, or telephone wire.
Improper grounding may result in electric shock, smoke, fire, or malfunction due to electrical noise interference.

S

⚠ CAUTION

To reduce the risk of current leakage, wire breakage, smoke, or fire, keep the wiring out of contact with the refrigerant pipes and other parts, especially sharp edges.
To reduce the risk of electric shock, shorting, or malfunctions, keep wire pieces and sheath shavings out of the terminal block.

Transportation and Repairs

⚠ WARNING

The unit should be moved, disassembled, or repaired only by qualified personnel. Do not alter or modify the unit.
Improper repair or unauthorized modifications may result in refrigerant leakage, water leakage, injury, electric shock, or fire.
After disassembling the unit or making repairs, replace all components as they were.
Failing to replace all components may result in injury, electric shock, or fire.
If the supply cord is damaged, it must be replaced by the manufacturer, its service agent or similarly qualified persons in order to avoid a hazard.

⚠ CAUTION

To reduce the risk of shorting, electric shock, fire, or malfunction, do not touch the circuit board with tools or with your hands, and do not allow dust to accumulate on the circuit board.

IMPORTANT

To avoid damage to the unit, use appropriate tools to install, inspect, or repair the unit
Do not unnecessarily change the switch settings or touch other parts in the refrigerant circuit. Doing so may change the operation mode or damage the unit.
To reduce the risk of malfunctions, use the unit within its operating range.
Do not switch on or off the main power in a cycle shorter than 10 minutes.
Short-cycling the compressor may damage the compressor.
To maintain optimum performance and reduce the risk of malfunction, keep the air pathway clear
To ensure proper operation of the unit, periodically check for proper concentration of anti-freeze.
Inadequate concentration of anti-freeze may compromise the performance of the unit or cause the unit to abnormally stop.
Take appropriate measures against electrical noise interference when installing the heat pumps in hospitals or facilities with radio communication capabilities.
Inverter, high-frequency medical, or wireless communication equipment as well as power generators may cause the heat pump system to malfunction. Heat pump system may also adversely affect the operation of these types of equipment by creating electrical noise.
Check the water system, using a relevant manual as a reference.
Using the system that does not meet the standards (including water quality and water flow rate) may cause the water pipes to corrode.
To reduce the risk of power capacity shortage, always use a dedicated power supply circuit,

1 Technical Specification

1.1 Construction Table

Rowan 3			
REFRIGERATION SIDE			
Compressor Type	-	Reciprocating	
Compressor Qty	Pcs.	1	
Refrigerant	-	Propane (R290)	
Refrigerant Circuits	Pcs.	1	
Refrigerant charge	kg	7.6	
Max Operating Pressure – LP Side	bar	15	
Max Operating Pressure – HP Side	bar	36	
Evaporators Type	-	Fin/Tube Air Coil	
Fin Material (Air Coil)	-	Aluminium (Al)	
Defrost Type	-	Hot Gas	
Defrost medium	-	R290	
DIMENSIONS & NOISE			
Colour	-	RAL7016 Anthracite	
Low Noise (LN)			
Height		2636	
Length		2400	
Depth		1400	
Unit Weight (Shipped)	kg	2136	
Sound Power Level Lw(A)	dB	68	
Standard Noise (SN)			
Height		2383	
Length		2400	
Depth		1400	
Unit Weight (Shipped)	kg	1800	
Sound Power Level Lw(A)	dB	84	
ACCESS			
Minimum free space side	mm	1000	1000
Minimum free space front	mm	1000	1000
Minimum free space back	mm	1000	1000
Minimum free space above	mm	6000	6000
WATER SIDE			
Type of internal exchangers	-	Stainless steel plate	
No. of Plate Heat Exchangers	Pcs.	1	
Exchanger Water Volume	L	27.3	
Connections waterside inlet/outlet	mm (OD)	65 (flanged)	
Control Methodology	-	PICV	
Total Waterside Pressure Drop (Max)	kPa	44.5	
Max System Water Flow Rate	l/s	2.30 at W60/50 10K TD	
Min Water Flow Rate	l/s	0.87	

FANS SECTION		
Fans type	-	Axial
N° fans	Pcs.	2
Total System Airflow (Max)	m³/s	8.9
Evaporator Airside Pressure Drop	Pa	201
Fan Input Power (Max)	kW	3.5
Fan regulation	-	0-10V
ELECTRICAL DATA		
Electrical supply	-	3~ 400V 50 HZ
Total Absorbed Power (Max)	kW	37.4
Total Current per phase (FLC)	A	59.3
Max Operating Current (MOC)	A	84.1
Max Start-Up Current	A	31.1
Max Inrush Current	A	252.3
Total kVA (Max)	kVA	41.1
Mains Isolator	A	125
Communication protocol	-	BACNET over IP (optional extra)
IP-Class	-	IP24

2 Refrigerant Information

2.1.1 Characteristics of R290 refrigerant

The Rowan 3 range of heat pumps manufactured by Clade Engineering Systems are equipped with propane (R290). Propane is classified as an A3 refrigerant (low toxicity but highly flammable) and must be handled in accordance with flammable gas safety guidelines.

Propane is odorless in its pure form and is heavier than air. If released in an enclosed or low-lying area, it can accumulate and form a flammable mixture with air. All personnel involved with specification, installation, operation, and maintenance of these units must be fully qualified, competent, and hold any certifications required for work on flammable refrigerants.

Propane is listed with two GWP values to the difference between its theoretical warming impact and its practical behaviour in the atmosphere. Its theoretical GWP, as defined by the IPCC, is approximately 3 and represents propane's inherent ability to absorb infrared radiation, assuming it behaves like long-lived greenhouse gases such as CO_2. However, in real-world applications, propane breaks down rapidly in the atmosphere, typically within two weeks, due to reactions with hydroxyl radicals. This short atmospheric lifetime means it does not accumulate and has a negligible long-term climate impact. As a result, its adjusted GWP over a 100-year timeframe is approximately 0.02, reflecting its true environmental impact in practical use.

Each unit is evacuated and pre-charged at the factory with the correct amount of R290, so no additional charge is required. The refrigerant charge can be found on the PED label.

In the event of component failure or a leak, the system should be stopped immediately. The remaining charge must be reclaimed or vented in a safe, controlled manner, observing all local regulations for flammable refrigerants. See the system maintenance manual for service valve access points and isolation procedures. Once repairs have been made, the system must be thoroughly evacuated and re-charged with the specified quantity of refrigerant as recorded on the PED label.

Model	Refrigerant (Kg)	Equivalent CO_2 tons (tCO_2e)
Rowan 3	7.6	21.9

Physical characteristics of the R290 refrigerant	
Safety class (ISO)	A3 (Low toxicity, Highly flammable)
GWP ($kg.CO_2e$)	3
Low flammability limit (LFL) (Kg/m^3 @ 60°C)	~0.038 (varies with temperature)
Burning velocity (BV) (cm/s)	~46
Boiling point (°C)	-42
GWP (100 yr ITH)	0.02
ODP (Ozone Layer Depletion)	0
Self-ignition temperature (°C)	470

2.1.2 Gas Leak Detection

The Rowan 3 heat pump is supplied with full leak detection safety systems. The design of the heat pump includes enhanced tightness joints and the refrigerant circuit is a sealed system. The design also separates electrical equipment to protect the system from any sources of ignition.

In the unlikely event of component failure or a leak the heat pump will detect a gas escape and shut down operation. Electrical systems will power down at 20% of the LFL (Lower Flammable Limit) except for the ventilation fan within the heat pump housing. The fan will continue to operate to remove any gas from the housing, ensuring any remaining charge is vented to atmosphere in a controlled manner.

The system will require a manual reset in the event of a gas leak shut down event. This prevents the system from automatically restarting until the cause of the leak or leak alarm is fully investigated and resolved.

See system maintenance manual for access points and isolation procedures. Once the issue has been rectified the system would need to evacuated and re-charged with the correct amount of refrigerant as recorded on the PED label.

⚠ WARNING

The designer/installer must consider adequate protection for gas escapes

2.1.3 Hazardous Area Classification (ATEX)

The Rowan 3 has been independently assessed against BS EN 600079-10-1 and EN 378. Due to the integral safety mitigation systems, including active leak detection, the area immediately surrounding the unit is classified as Non-Hazardous during normal operation and foreseeable fault conditions.

Consequently, there is no zone 2 requirement around the unit.. This allows for greater flexibility in siting the equipment compared to standard hydrocarbon chillers.

While the unit itself does not generate a hazardous zone, the installation site must be evaluated under the Dangerous Substances and Explosive Atmospheres Regulations 2002 (DSEAR).

It is the statutory responsibility of the System Designer or Site Operator to conduct a site-specific DSEAR assessment. This assessment must look beyond normal operation and consider catastrophic failure scenarios, such as but not limited too:

- Total loss of refrigerant containment (e.g., pipe rupture).
- External fire affecting the unit.
- Physical impact damage.

The assessment should specifically evaluate the accumulation of heavier-than-air propane vapour in low-level areas, such as but not limited too:

- Nearby drains, manholes, and culverts.
- Basement wells or light wells.
- Trenches and service ducts.

2.2 Operating Ranges

2.2.1 Heating

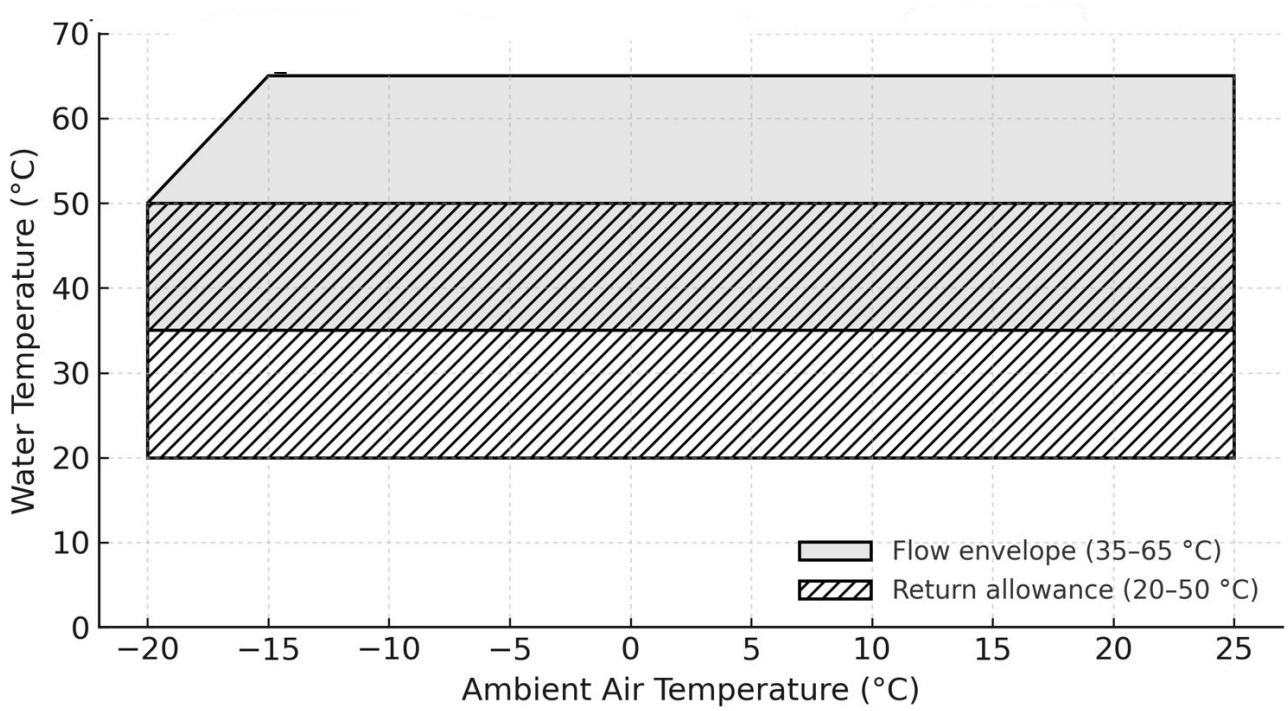

The Rowan 3 unit is rated for a maximum return water temperature of 50 °C. The permissible flow/return temperature differential (ΔT) varies as follows:

- **Below 45°C return:** Minimum ΔT is **5 K**.
- **Across all operating conditions:** Maximum ΔT is **20 K**.

2.3 Pressure Independent Control Valves

All Rowan 3 units are factory-fitted with Danfoss AB-QM NovoCon Pressure Independent Control Valves on the water circuits. The Rowan 3 H&C is fitted with a DN50 PICV and do not include an internal circulating pump. Instead, the water circulating pump for the system must be sized, sourced, and installed by a third party; Clade does not supply a circulating pump as part of the standard heat pump offering.

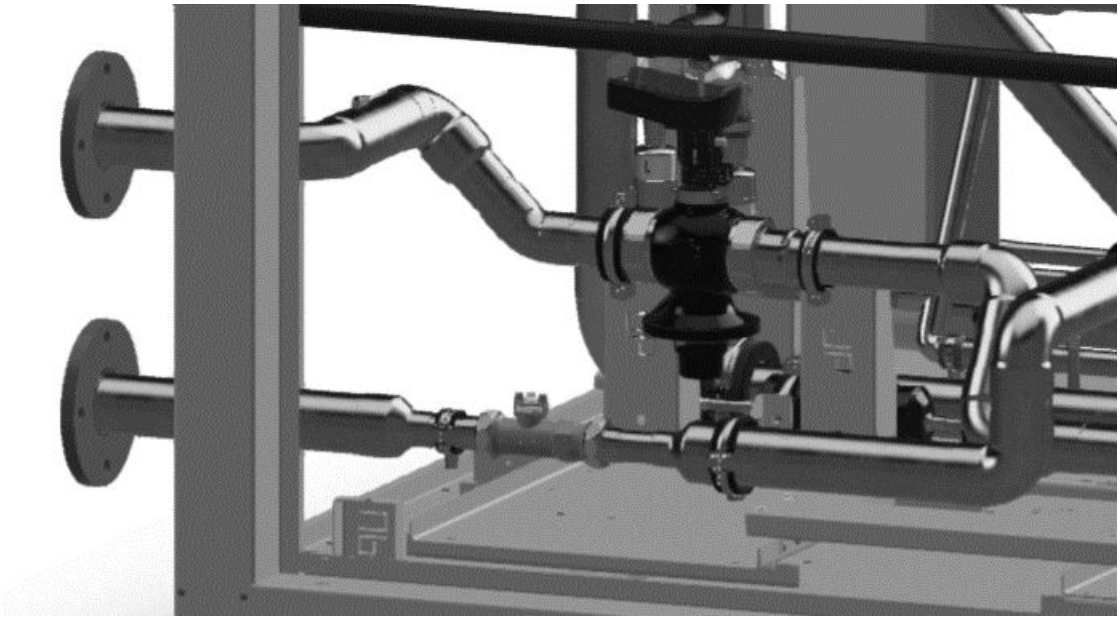

The PICVs are engineered to regulate the flow through the plate heat exchanger by varying the pressure drop across the valve independently of the inlet pressure. This design ensures that the system-side flow balance remains unaffected. Moreover, the design flow rate is directly set in the actuator in built software, eliminating the need for manual valve presetting since the actuator automatically manages the valve's operating envelope.

2.3.1 Primary Pump Control

The system circulating pump must be configured to operate in **constant pressure (constant differential pressure) mode**. Variable pressure, constant flow or proportional pressure pump control modes must not be used with this system.

3 Unit Installation

3.1 General Installation notes

3.1.1 Site Selection Criteria

Access and Maintenance

- Select a location that provides safe and unobstructed access for commissioning, routine maintenance, and emergency intervention
- Maintain the minimum clearances specified,1000mm to all four sides and 6000mm above the unit. These clearances must be maintained permanently and must not be compromised by subsequent installation of plant, pipework, fencing, or structural elements
- Ensure the electrical panel access face has sufficient clear space for safe door swing and working distance in accordance with BS 7671:2018.

Airflow

- Avoid siting in corners, against tall walls, beneath overhangs, or in recesses where discharge air can stagnate or recirculate back to the evaporator inlet. Air recirculation causes the unit to reduce output and efficiency and potentially triggering high-pressure faults
- Avoid locations subject to strong prevailing winds directed at the evaporator face – wind pressure can impede fan operation and cause unpredictable airflow patterns across the coil
- Where multiple units are installed in an array, refer to Section 3 for array spacing requirements to prevent inter-unit recirculation
- Keep the evaporator coil free from debris accumulation such as leaves, litter, and windblown material will progressively block the coil face, reducing airflow and performance. Consider the proximity of vegetation at maturity, not at the time of installation.

Environmental

- Avoid flood-prone areas. Where flood risk cannot be eliminated, raise the unit on a plinth of sufficient height to keep electrical connections and the refrigerant circuit above the maximum credible flood level
- Account for maximum anticipated snow depth at the installation location, the unit must remain accessible, and the evaporator airflow path must remain unobstructed under maximum snow conditions. Where significant snowfall is expected, provide adequate plinth height and consider snow guards or baffles
- Avoid siting near sources of contaminated air such as chimneys, flues, cooling tower discharge, vehicle exhausts, or industrial emissions. Contaminated intake air will degrade coil performance and may cause accelerated corrosion of the aluminium fins and copper coil
- Consult the unit's declared sound power level (dB A) in the technical specifications. Use this to model expected sound pressure levels at neighbouring facades and property boundaries.
- When the unit is close to a coastal or saline environment , Blygold coating of the evaporator is suggested in order to protect the evaporator from corrosion.

Utilities & Drainage

- Confirm that electrical connection runs do not exceed the maximum allowable distance specified by the manufacturer.
- Provide a dedicated condensate drainage system to prevent standing water beneath the unit.
- Ensure water from the unit can be always drained properly.

Security & Safety

- If there is a risk of unauthorised access (children, vandalism, wildlife), install appropriate barriers or fencing.
- This unit is designed for outdoor installation only and must not be enclosed indoors.
- Do not install adjacent to open flame sources, gas fired plant flues, or equipment that generates sparks or sustained ignition sources at low level
- The refrigerant leak detection and ventilation fan fitted within the unit are active safety measures ensure the ventilation outlet is not obstructed and that the discharge from the ventilation fan cannot be directed towards an ignition source
- Ensure the installation location provides adequate natural ventilation at low level in accordance with EN 378-3. The unit must not be installed in a fully enclosed plant room without specific ventilation provision assessed against the R290 charge quantity.

Adherence to these guidelines will ensure safe installation, effective airflow, and long-term reliability of the outdoor unit

3.1.2 Structural Requirements

- Concrete bases are the preferred foundation type, providing stable, level support and effective mass for vibration damping
- All support points must be verified as level before the unit is positioned. An unlevel installation increases vibration, causes uneven loading on the frame, and may affect oil return in the compressor.
- The foundation must be structurally capable of supporting the unit operating weight. For roof installations, verify that the roof structure supports both the unit operating weight and the additional maintenance load.
- Separate the unit foundation from the building structure wherever possible to limit transmission of compressor and fan vibration. This is particularly important on rooftop installations where the structure provides a direct acoustic path to occupied spaces below.
- Use the factory-provided lifting centres, do not improvise alternative lifting or fixing arrangements
- Mount the unit above ground level to facilitate condensate drainage and to reduce moisture ingress into the base frame, a minimum 150mm plinth height is recommended.

3.1.3 Minimising Vibration

The Rowan 3 is factory-fitted with TICO S/PA anti-vibration pad beneath the refrigeration pack base frame, internal to the housing at four corner positions. This pad, a blend of cork particles and polychloroprene acrylonitrile elastomers, 12.5mm thickness, isolates the compressor and refrigeration circuit from the unit housing, reducing structure-borne vibration transmission into the pipework and enclosure panels.

TICO S/PA (red material) must be used in all cases. Incorrect pad specification will affect the isolation characteristics and may increase vibration transmission.

Please note - Clade do not supply or install vibration mitigation solutions for our heat pumps specifically for limiting vibration transmission from the housing to the building structure. However, TICO pad is supplied within the heat pump housing.

TYPICAL PROPERTIES

Tensile Strength	2.1 MN/m^2	Tested in accordance with BS 903
Elongation at Break	50%	
Hardness	69 + 5^0	IRHD
Thermal Conductivity	0.1 0.7	W/m^0C Btu x in/ft^2 x h x ^0F
Damping Factor	0.1	
Co-efficient of Friction	0.65 0.5	TICO to concrete TICO to bright mild steel
Temperature Range	-40° to +100° C	TICO S will operate satisfactorily over the indicated range and is suitable for both arctic and tropical climates
Maximum Load-bearing Capacity	0.5 MN/m^2	TICO S will withstand very high dynamic and static loads without physical breakdown. In machinery mounting applications, the recommended max. static load should not be exceeded without consultation.

Figure 1 - Tico Pad Specification

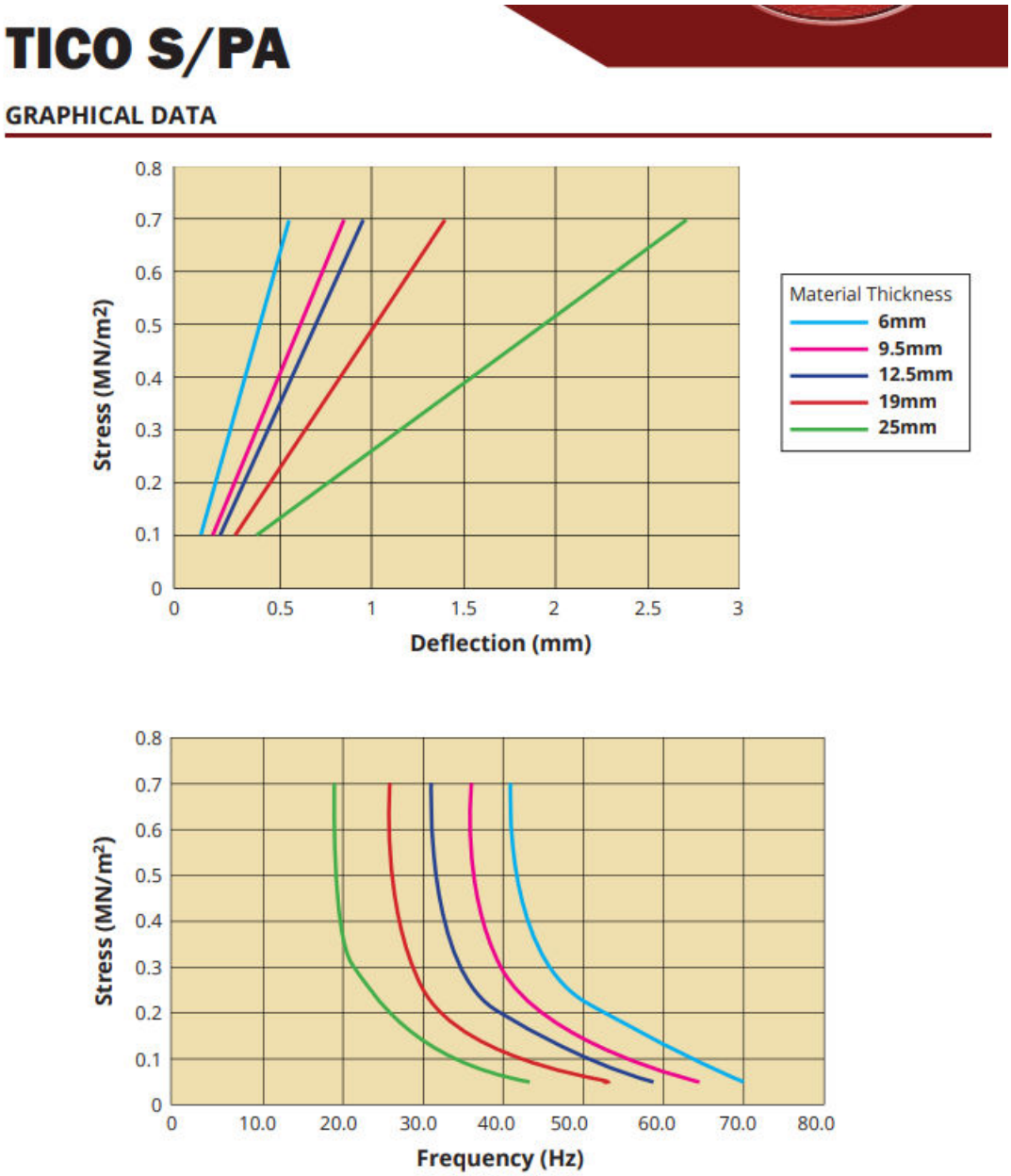

Figure 2 - Tico Pad Performance Curves

Please note that Tico S/PA MUST be specified in all cases. This is the red Tico material.

If Tico pad is used externally, the Tico pad supplied MUST be the same width as the width of the support channel to mitigate bending of the support channel and structural damage to the heat pump housing. Clade would recommend an S/PA pad with thickness 12.5mm (see above for further details) and these are to be in the corners of the heat pump between the support channels and the concrete or mounting structure.

Flexible connections must be fitted on all water pipework connections at the unit – refer to Section [4]. Do not rigidly fix pipework to the unit housing.

3.1.4 Charging lines

Where heat pumps are installed at roof level, ensure that dedicated charging lines are provided. These lines must allow for safe and efficient charging of refrigerant, either during commissioning when pre-charging is not feasible, or for subsequent top-ups during maintenance. The charging lines should be easily accessible from ground or plant level, designed to minimise pressure drop, and clearly identified to avoid confusion with other services.

3.1.5 Pressure Relief Valve Refrigerant Side

PRVs are included on the refrigerant loop within the unit.

WARNING: Do not cap, plug, or restrict the outlet of any refrigerant PRV under any circumstances. Blocking a PRV discharge creates a risk of catastrophic pressure vessel failure. Any evidence of PRV discharge must be investigated immediately, do not simply replace or reset the heat pump or the PRV without identifying and resolving the root cause of the over-pressure condition.

3.1.6 Condensate

The Rowan 3 produces significant volumes of condensate during defrost cycles in heating mode. Condensate drainage must be designed and installed before commissioning.

- Route condensate away from pedestrian areas, vehicle access routes, and building entrances where pooling water could freeze and create a slip hazard
- Install a continuously falling drainpipe from the unit drain point, do not create traps or horizontal sections where water can pond and freeze within the pipework
- In locations where ambient temperatures regularly fall below 0°C, fit self-regulating trace heating cables to the condensate drain pipework to prevent ice blockage.
- Where the unit is on a roof, confirm the roof drain capacity is sufficient to handle defrost condensate volumes in addition to rainfall, defrost cycles can produce substantial water volume in a short period during cold weather operation

3.1.7 Freezing Prevention

All external water pipework must be protected against freezing. Failure to provide adequate freeze protection will cause damage to the plate heat exchangers, pipework, and ancillary components, this damage is not covered under the manufacturer's warranty.

The following measures must be implemented:

Glycol dosing: The system water circuit must be dosed with inhibited propylene glycol at a concentration providing frost protection to a minimum of −10°C, or to the minimum expected ambient temperature at the installation location plus a 5°C safety margin, whichever gives the lower freeze point

Trace heating: Self-regulating trace heating cables must be installed beneath the insulation on all external water pipework exposed to ambient temperatures below 0°C. Cables must be rated to maintain fluid temperature above 0°C at the minimum design ambient temperature of −25°C. Select self-regulating cable type, fixed-output cables create hot spots and may overheat insulation. Verify cable performance under worst-case conditions after commissioning.

Pump failure protection: In the event of circulating pump failure, the system will lose the heat input that prevents freezing during cold ambient conditions. A pump failure alarm must be connected to a BMS or monitoring system capable of alerting site personnel or a remote monitoring service. Where the system may remain unattended for extended periods in cold weather, a drain-down and isolation procedure must be established and documented.

3.2 Fire Safety

The insulation materials used in the construction of the Rowan 3 range are classified in accordance with EN 13501-1, the European standard for reaction-to-fire performance of construction products.

EN 13501-1 classifies materials across three performance criteria:

- Combustibility – the extent to which a material contributes to a fire, rated A1 (non-combustible) through to F (no performance determined)
- Smoke production – rated s1 (low) through to s3 (high)
- Flaming droplets/particles – rated d0 (none) through to d2 (high)

3.2.1 Rowan 3 Standard Noise (SN)

The acoustic insulation material used in the Standard Noise variant is classified:

Criterion	Rating	Meaning
Combustibility	B	Very limited contribution to fire – will not significantly fuel a fire, though the material is not fully non-combustible
Smoke production	s3	High smoke output under fire conditions
Flaming droplets	d0	No flaming droplets or particles – will not drip burning material

3.2.2 Rowan 3 Low Noise (LN)

The acoustic insulation material used in the Low Noise variant is classified:

Criterion	Rating	Meaning
Combustibility	A1	Non-combustible – the highest possible classification
Smoke production	–	No smoke emission (A1 classification inherently carries no smoke or droplet sub-classifications)
Flaming droplets	–	Not applicable

The LN variant uses a fully non-combustible material with zero smoke emission, making it the preferred selection for fire-sensitive applications or where planning or building regulations impose restrictions on combustible materials in plant areas.

3.3 Water quality

3.3.1 General Requirements

The water quality of the system directly affects the service life of the plate heat exchangers, circulating pump, PICV actuators, and all other water-side components. Poor water quality is one of the most common causes of premature heat exchanger fouling, corrosion, and component failure, none of which are covered under the manufacturer's warranty.

The system must be maintained in accordance with BSRIA BG 50/2021 (Water Treatment for Closed Heating and Cooling Systems) and BS 8552 throughout its operational life. Water quality must be verified at commissioning and checked at every annual service. Records of water quality test results must be retained on site.

3.3.2 New Systems

Before commissioning any new installation the entire water circuit must be thoroughly flushed to remove installation debris including weld spatter, flux residue, jointing compounds, mineral oils, pipe preservatives, and swarf. Failure to flush adequately will result in debris entering the plate heat exchangers and PICV valves, causing fouling, blockage, and damage. After flushing, drain and refill with clean mains water dosed with the correct inhibitor and glycol concentration

3.3.3 Existing Systems

When connecting the Rowan 3 to an existing system, or when replacing an existing heat source, the condition of the system water must be assessed before the unit is connected. Connecting to a contaminated system will void the warranty.

- Obtain a water sample from the existing system and test against the parameters in Section 6.2.7 before proceeding
- Drain and flush all existing pipework before installing the new unit – flush each section of the system separately, paying particular attention to low-flow areas such as dead legs, bypass circuits, and the bases of vertical risers where sludge accumulates
- Where the existing system contains significant magnetite sludge, indicated by black discolouration of the sample water a full power flush is mandatory before connection. Consider whether the existing system condition warrants replacement of heavily corroded sections of pipework before connecting the new unit
- After flushing, refill and dose accordingly.

3.3.4 Water Filter

A minimum **30-mesh (0.6mm aperture) strainer** must be installed on the return pipework at the inlet to each Rowan 3 module. The strainer must be:

- Positioned upstream of the unit isolation valve so it can be cleaned with the unit isolated
- Accessible for routine cleaning without draining the system
- Cleaned after initial system fill, after the first 48 hours of operation, and at every annual service thereafter
- Inspected and cleaned more frequently during the initial weeks of operation on a new system, as heat cycling mobilises further installation debris

3.3.5 Anti-freeze Solutions

Adding antifreeze increases system pressure drop and only inhibited (non-corrosive) glycol compatible with the circuit should be used. Do not use different glycol mixtures (i.e. ethylene with propylene).

% PROPYLENE GLYCOL BY WEIGHT	5%	10%	15%	20%	25%	30%	35%	40%	45%	50%
Freezing temperature (°C)	-1.6	-3.3	-5.1	-7.6	-9.6	-12.7	-16.4	-21.1	-27.9	-33.5
Safety temperature (°C)	-7.0	-8.0	-10.0	-13.0	-15.0	-18.0	-21.0	-26.0	-33.0	-39.0

3.3.6 Minimum Water Quality Requirements for Rowan 3 Units

The system water must be maintained to BS 8552 throughout the operational life of the installation. Poor water quality is one of the most common causes of premature heat exchanger degradation, corrosion, and fouling all of which will void the product warranty if found to be the root cause of a fault. Parameters must be tested at commissioning and at every annual service interval using calibrated test equipment. All results must be recorded and retained on site for inspection.

Standard Parameters

Parameter	≤ 60°C System	> 60°C System
pH (at 25°C)	7.0 - 8.0	7.0 - 8.0
Electric conductivity (µS/cm at 25°C)	300 or less	300 or less
Chloride ion (mg Cl/L)	50 or less	30 or less
Sulfate ion (mg SO_4/L)	50 or less	30 or less
Acid consumption – pH 4.8 (mg $CaCO_3$/L)	50 or less	50 or less
Total hardness (mg $CaCO_3$/L)	70 or less	70 or less
Calcium hardness (mg $CaCO_3$/L)	50 or less	50 or less
Ionic silica (mg SiO_2/L)	30 or less	30 or less

Reference Parameters

Parameter	Recirculating water	Make-up water
Iron (mg Fe/L)	1.0 or less	0.3 or less
Copper (mg Cu/L)	1.0 or less	1.0 or less
Sulfide ion (mg S^{2-}/L)	Not to be detected	Not to be detected
Ammonium ion (mg NH_4^+/L)	0.3 or less	0.1 or less
Residual chlorine (mg Cl/L)	0.25 or less	0.3 or less
Free carbon dioxide (mg CO_2/L)	0.4 or less	4.0 or less
Ryznar Stability Index	To be assessed	To be assessed

3.4 Delivery & Unpacking

The Rowan 3 is delivered fully assembled and charged with R290 refrigerant. Each unit is shipped on its base mounting frame, which is designed to accept both forklift tines and crane or Hiab lifting straps.
All lifting operations must be carried out by qualified personnel using equipment rated for the unit's shipping weight. Refer to the Technical Specifications section for the shipping weight of each unit variant.

Forklift Lifting – Insert tines through the base frame channels, ensuring the load is centred and balanced before lifting.

Crane/Strap Lifting – Pass lifting straps underneath and between the base frame mounting points. A spreader bar must be used to prevent straps from bearing against the aluminium grille or cladding panels. Ensure straps are rated for the full shipping weight of the unit and that the crane capacity accounts for the lifting radius.

If the equipment arrives damaged, the recipient must notify the supplier immediately. Record any issues on the delivery sheet before signing and take photographs for evidence. If concealed damage is discovered after unpacking, it must be reported within seven working days of receipt for any claim to be valid. The recipient is responsible for compiling all evidence and submitting it to the supplier.

3.5 Structural Loading Points

The Rowan 3 must be supported at the designated structural loading points only. These are indicated in blue on the drawing below and correspond to the reinforced sections of the base frame where the unit's operating weight is intended to be transferred to the supporting structure.
Supporting steelwork or mounting frames must be designed to bear at these points specifically. Do not attempt to support the unit at any other location on the base frame. the frame sections between the loading points are not designed to carry the full unit weight and may deform under load, causing misalignment, increased vibration, and potential structural damage to the unit housing.

3.5.1 Structural Loading Points Standard Noise`

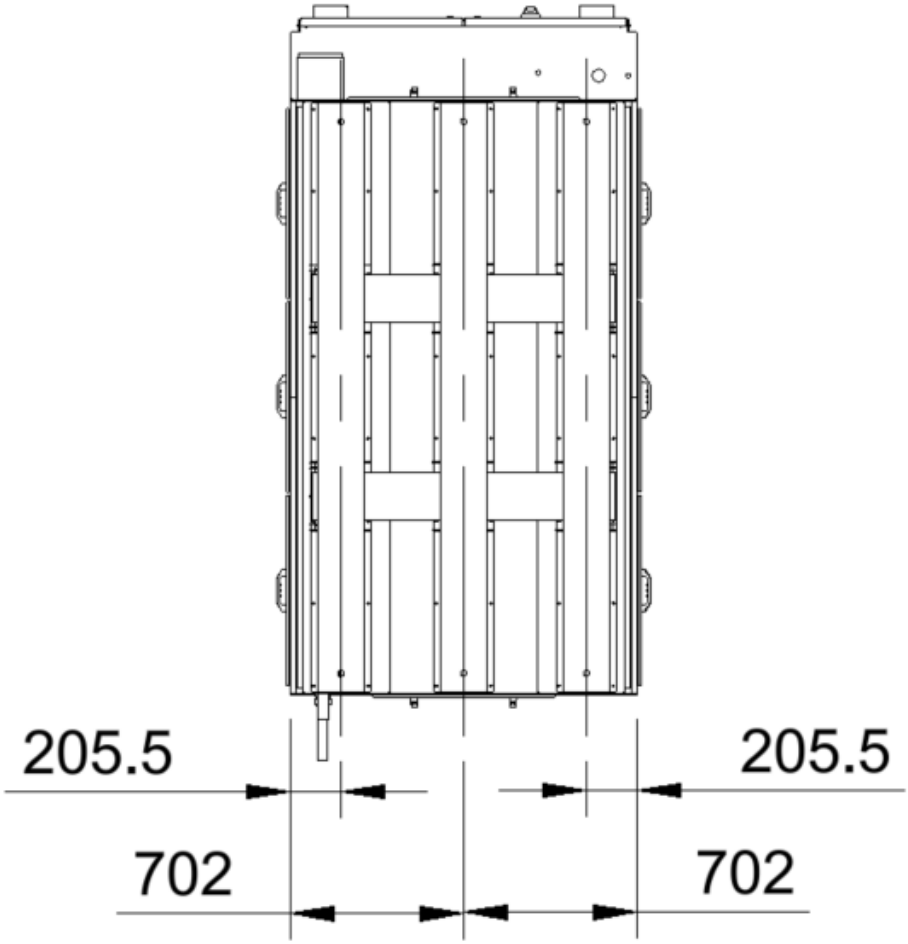

3.5.2 Structural Loading Points Low Noise`

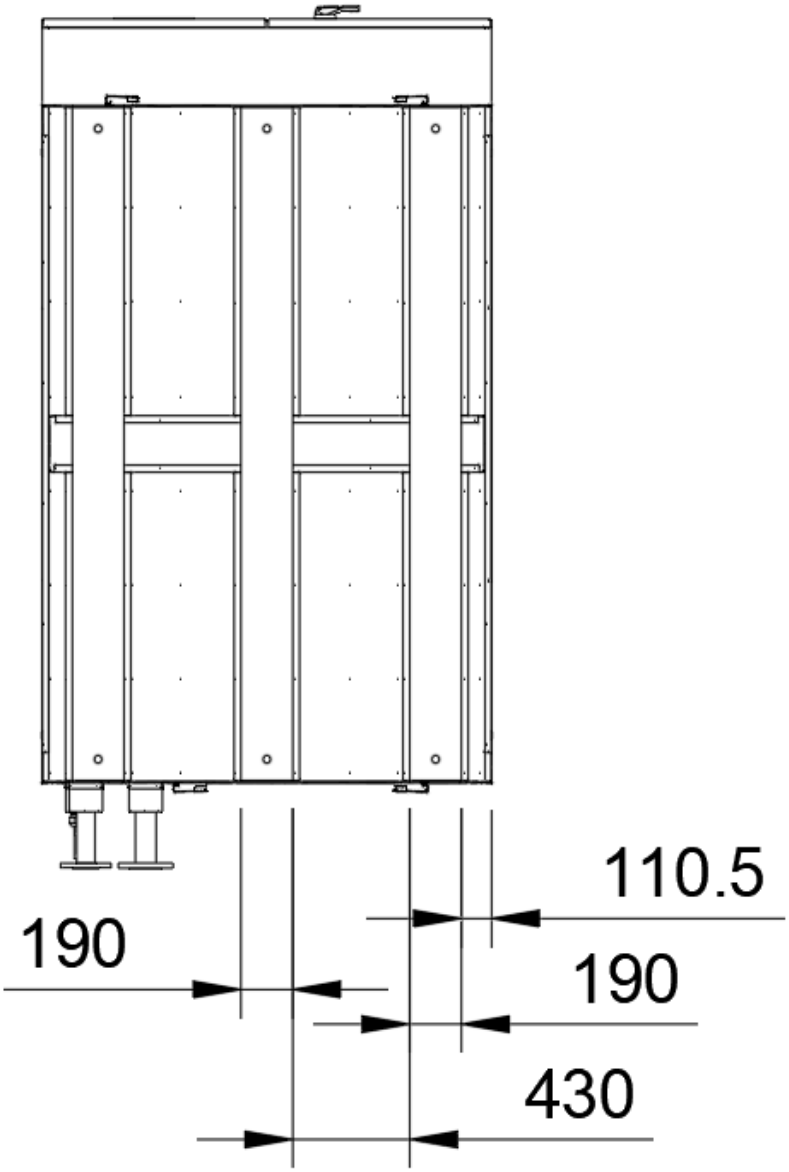

3.6 Lifting Centers

The Rowan 3 has two designated lifting points located on the base frame, as shown in the drawing below. These are the only permitted lift points do not attempt to lift the unit from any other location on the frame or housing. Lifting must be carried out using Fork Trucks or Lifting straps. Forks must be inserted through the two lifting point apertures in the base frame. Lifting straps must pass through the two lifting point apertures and be rated for the full unit weight with the appropriate safety factor applied

3.6.1 Lifting Centers Standard Noise

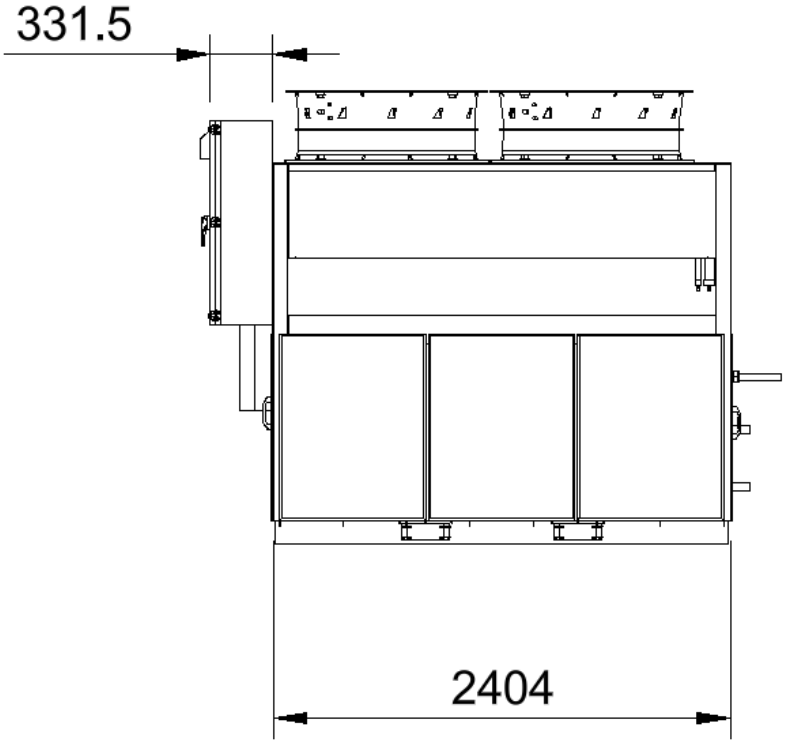

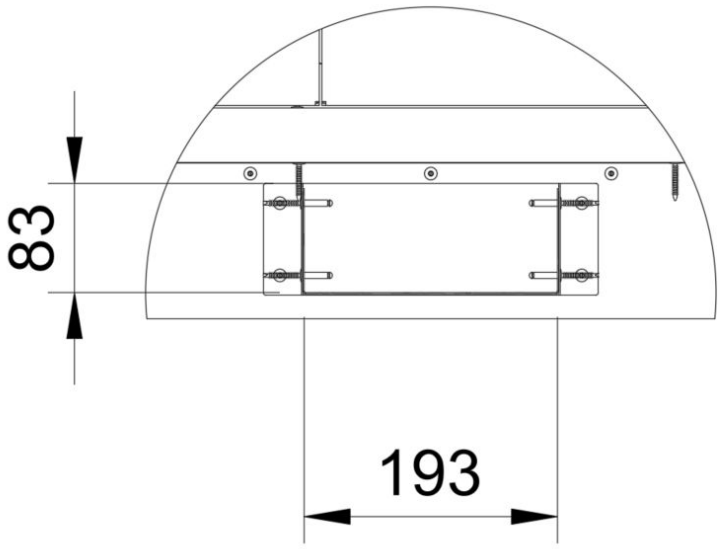

3.6.2 Lifting Centers Low Noise

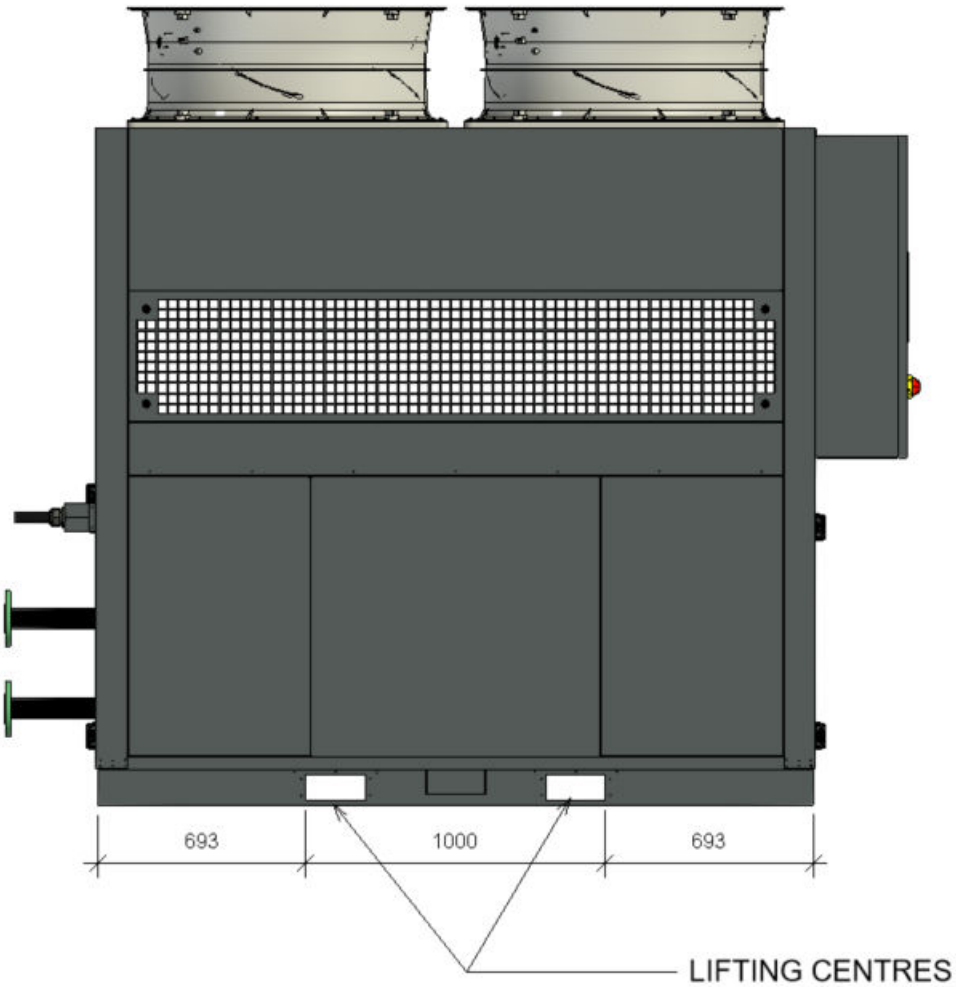

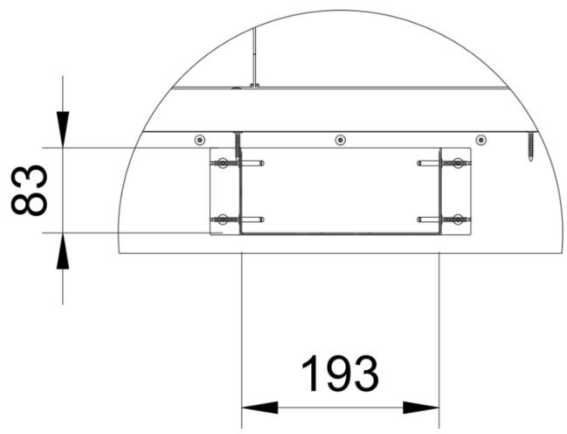

4 Installation Space Requirements

It is essential that the space requirements detailed in this section are strictly followed. Inadequate clearance will restrict airflow and compromise unit performance. Insufficient space will also obstruct access for routine maintenance, repairs, or replacement of components, which may result in warranty being void. Particular attention must be given to the electrical cabinet side of the unit. Clearance here must also account for “bounce-back” space, which is a health and safety requirement to ensure safe working conditions during servicing.

4.1 Dimensions Standard Noise

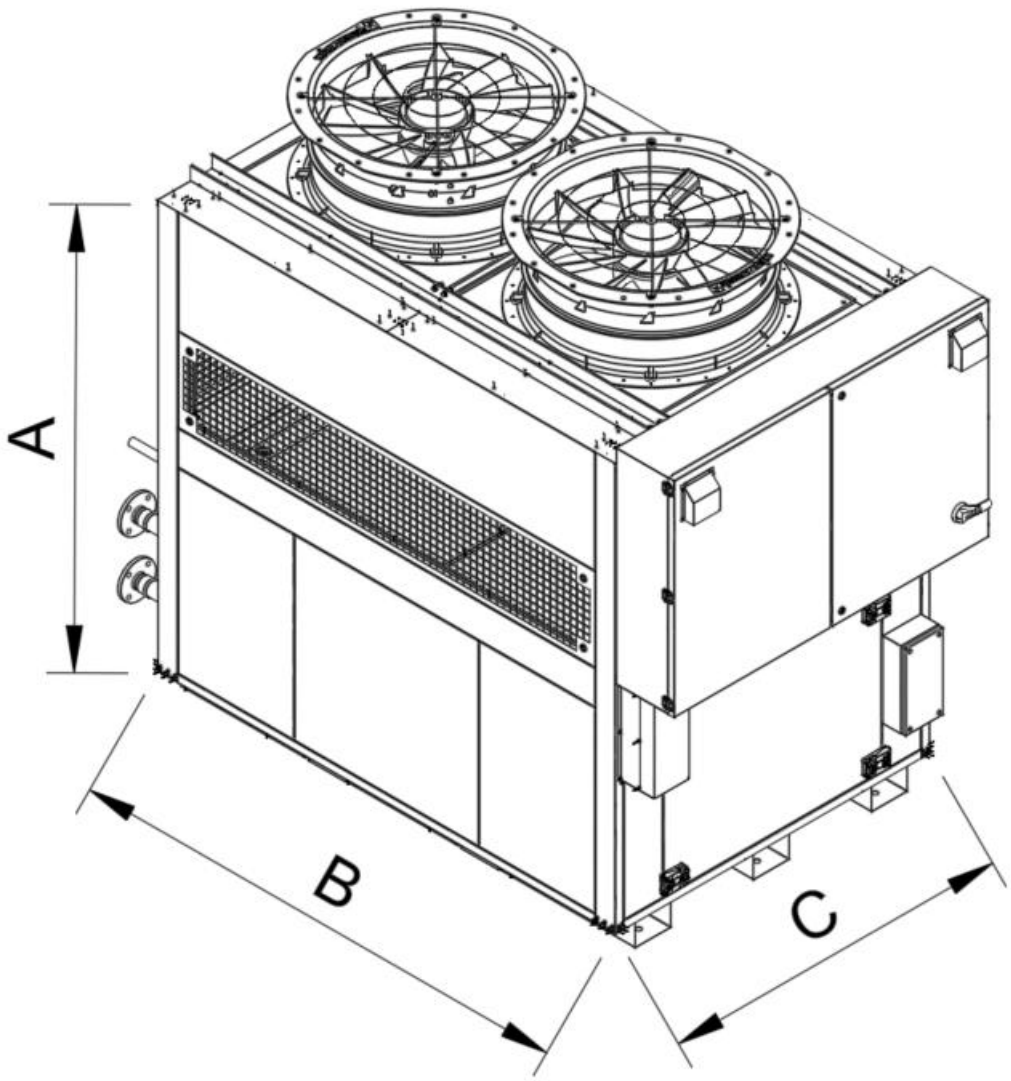

Unit	Height ‘A’ (mm)	Length ‘B’ (mm)	Depth ‘C’ (mm)	Shipping Weight (kg)
Standard Noise	2383	2400	1400	1800

4.2 Dimensions Low Noise

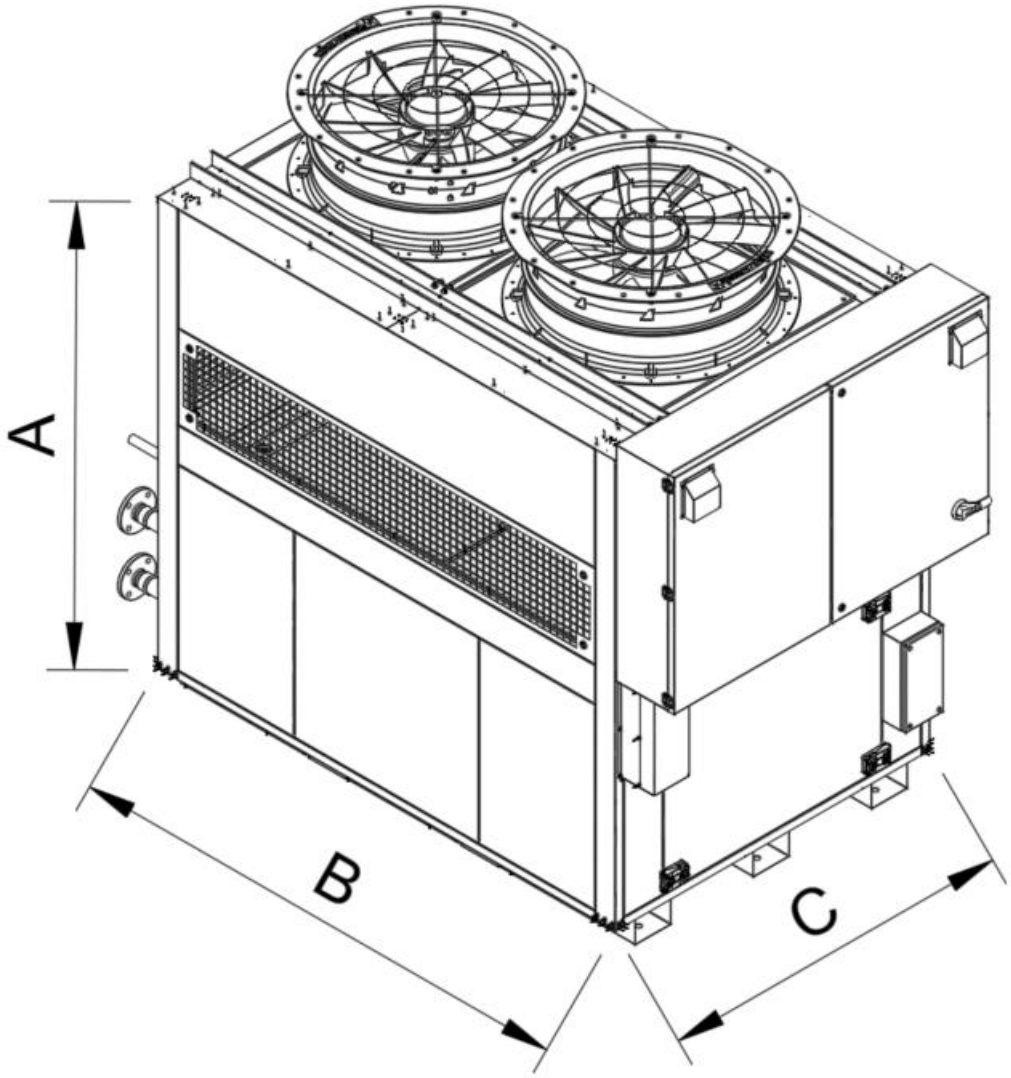

Unit	Height 'A' (mm)	Length 'B' (mm)	Depth 'C' (mm)	Shipping Weight (kg)
Low Noise	2636	2400	1700	2171

4.2.1 Single Unit Installation

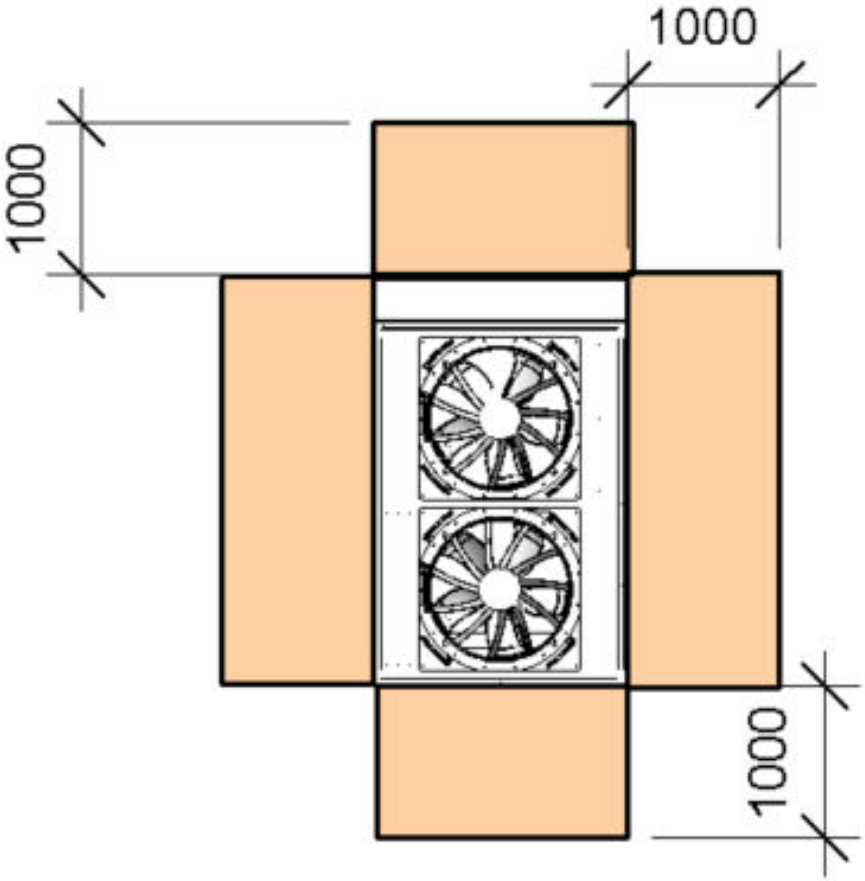

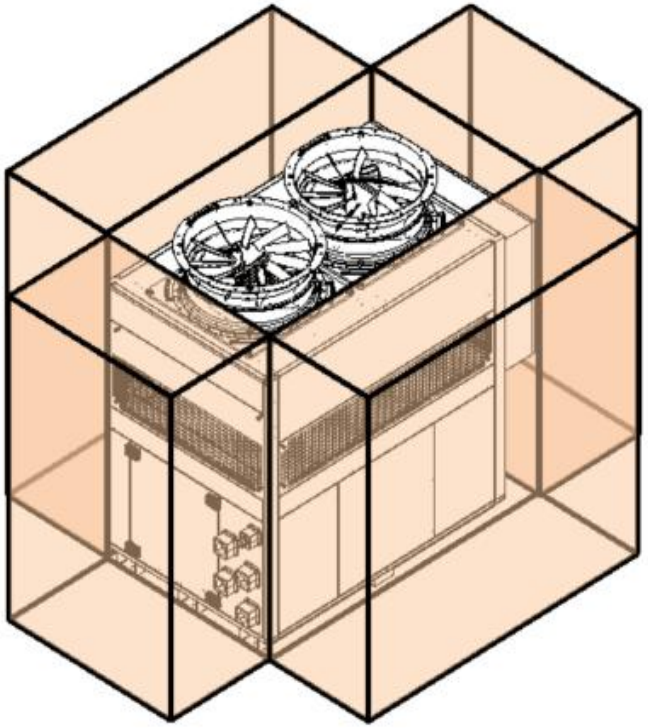

.

4.2.2 Multiple Unit Installation

When installing multiple units, make sure to take into consideration factors such as providing enough space for people to pass through, ample space between blocks of units, and sufficient space for airflow. Side by side installation, allow access to side of each unit for access.

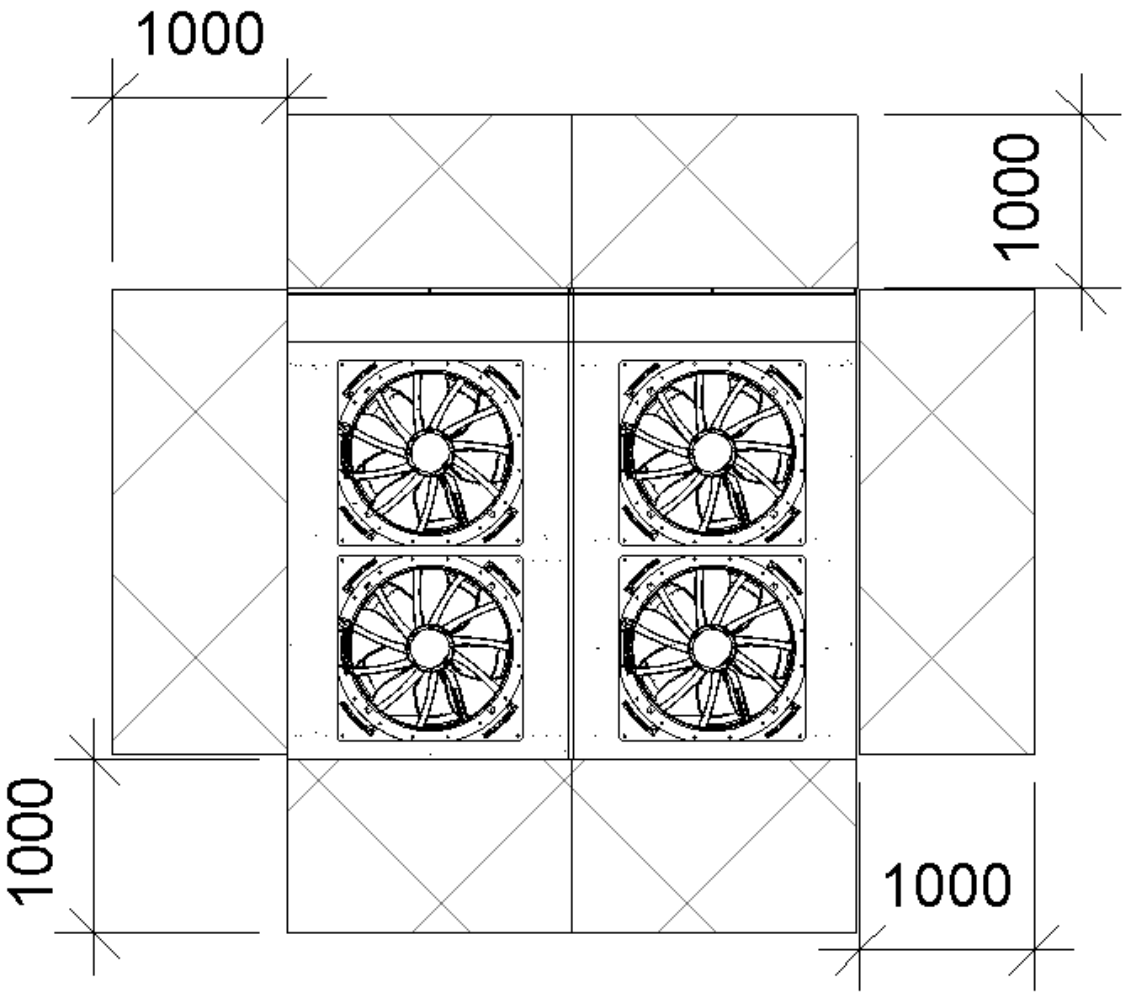

There must be a 50mm gap between units to allow for removal of lifting straps once the unit has been placed down after lifting.

4.2.3 Vertical Clearance

For maximum airflow and therefore better performance, Clade recommends t least 6m clearance above the unit

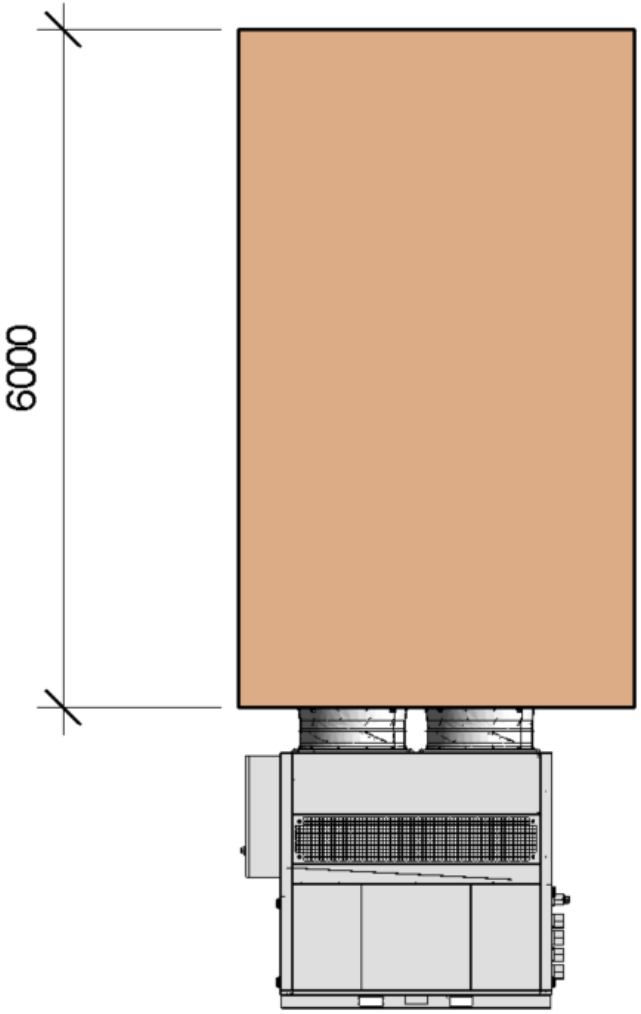

4.2.4 Space Requirements from Header

Where a common header is installed in front of the unit, a minimum clear distance of 1500 mm must be maintained between the header and the front access panel of each unit. This clearance provides the swing arc of the hinged access panel through its full opening, safe standing and working space for an engineer at the open panel, and withdrawal space for components removed through the front aperture. The 1500 mm is measured horizontally from the front face of the access panel in the closed position to the nearest point of any part of the header installation. This includes insulation, valve bodies, handwheels and actuators, strainer bodies, drain and vent points, and pipe supports or brackets.

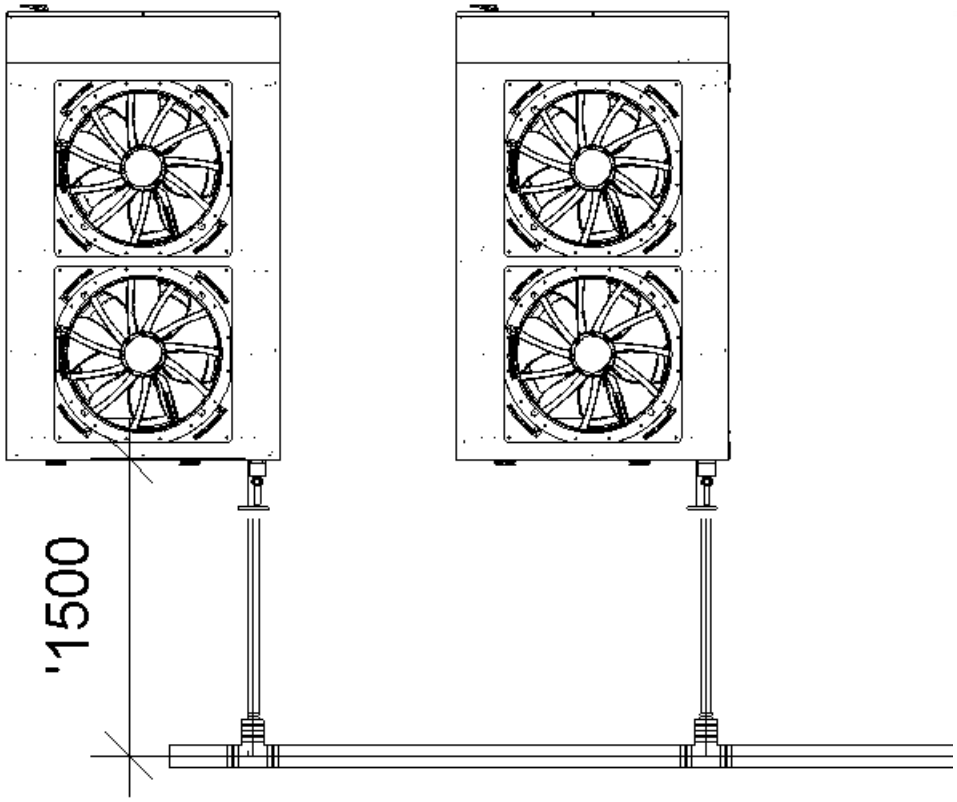

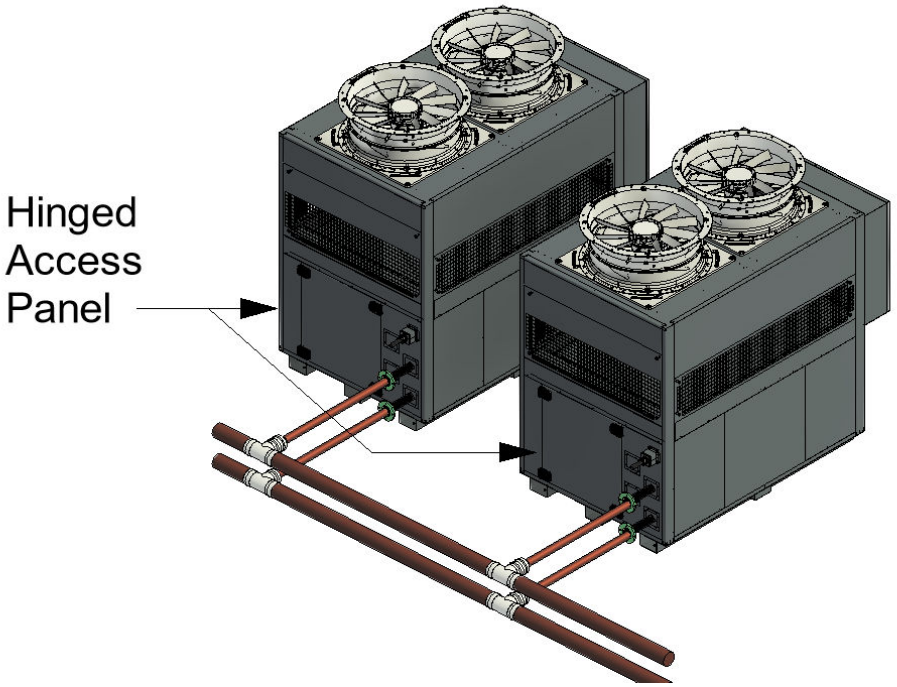

4.2.5 Wall Heights

(1)

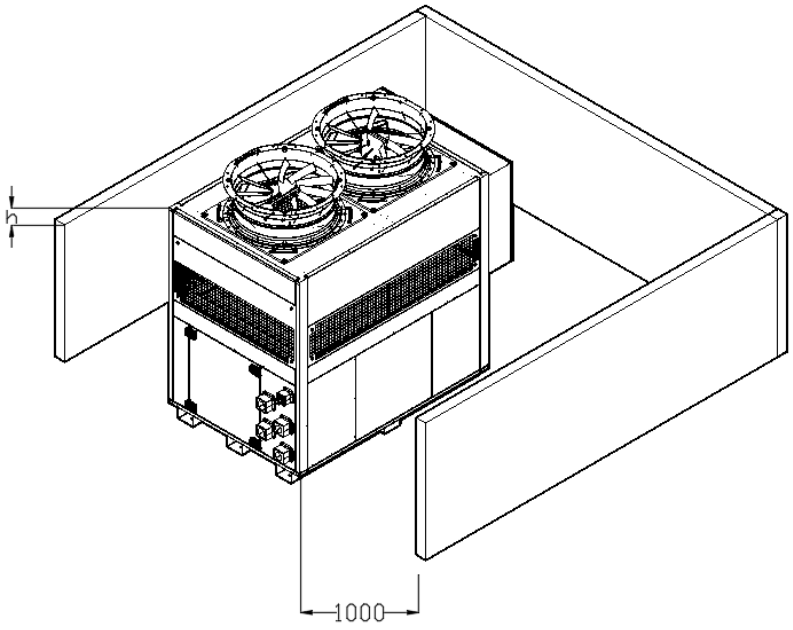

(2)

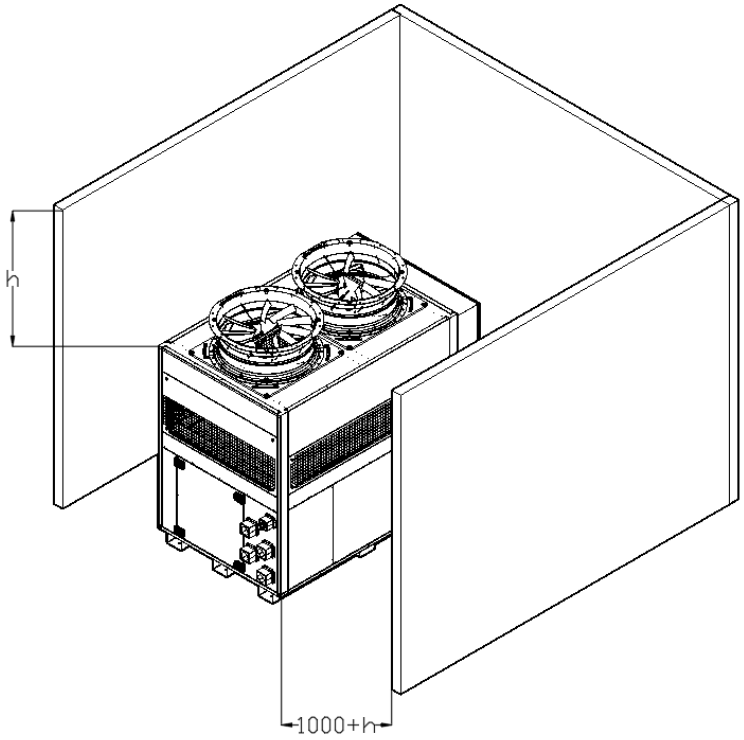

The required clearances around the unit are affected by the height of any adjacent walls or structures. The following scenarios must be used to determine the correct minimum clearances for the installation site.

(1) Walls around the unit do not exceed the unit height.
Where all adjacent walls or structures are equal to or lower than the height of the unit, a minimum clearance of 1000 mm must be maintained on all sides.

(2) One or more walls exceed the unit height
Where one or more adjacent walls or structures exceed the height of the unit, the standard 1000 mm clearance is no longer sufficient. The required clearance must be increased on the affected side(s) by the amount <h>, where <h> is the height by which the wall exceeds the top of the unit.

4.3 Service Connections

When selecting a location for the unit(s) consider of service connection positions. All water service connections are located on the right hand side panel of the heat pump and electrical on the left hand side panel of the heat pump.

4.3.1 Standard Noise

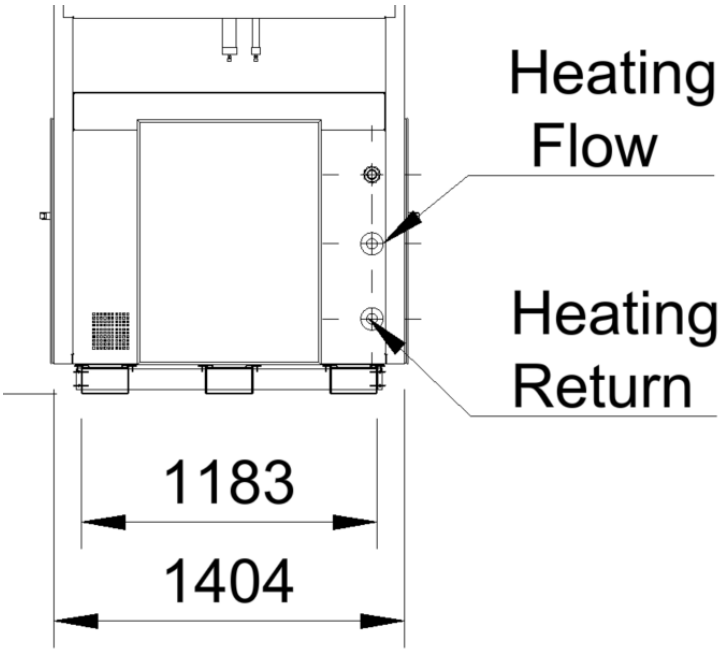

4.3.2 Low Noise

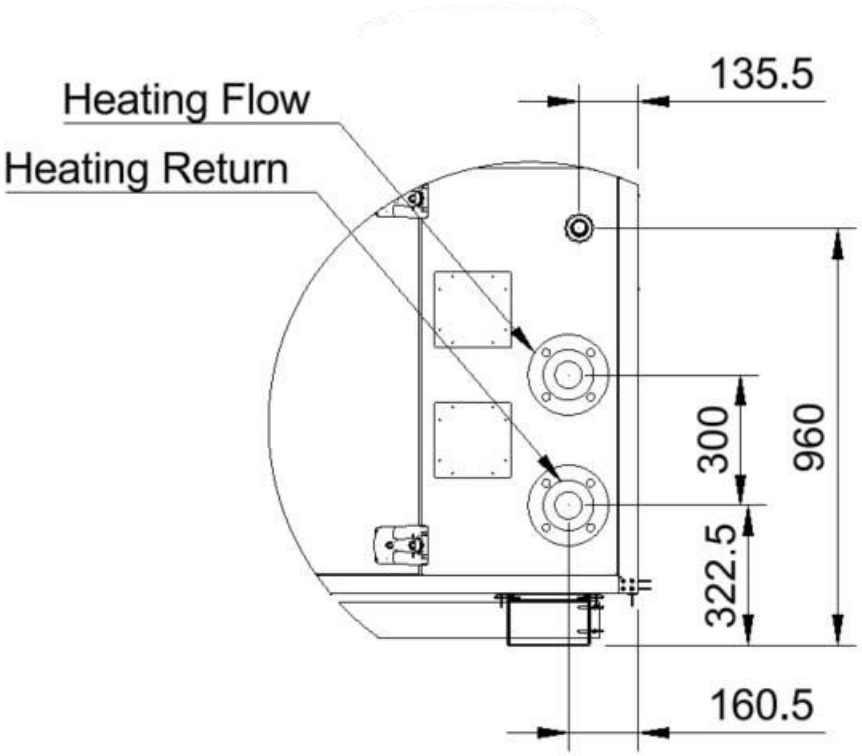

5 Piping and Hydraulics

5.1 Piping Connections

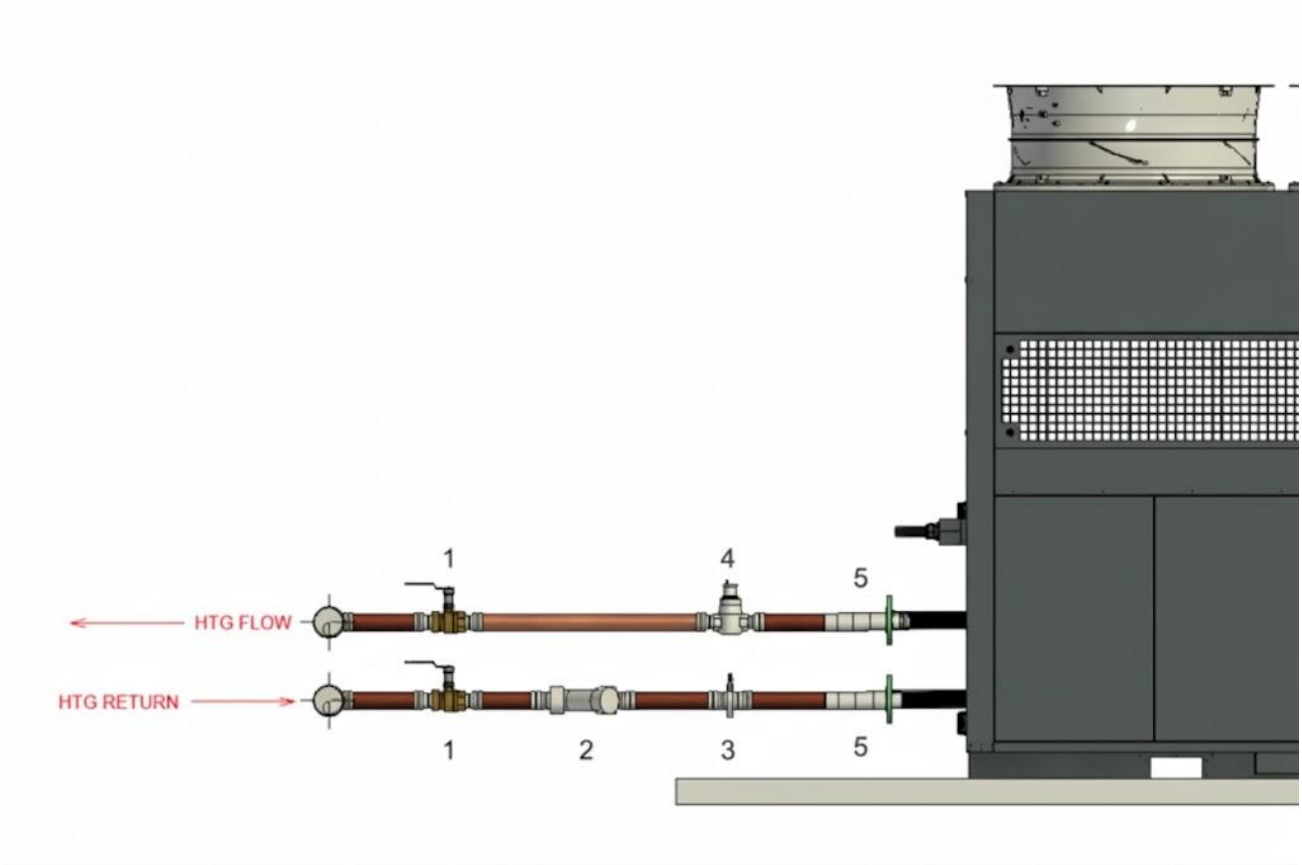

Each UNIT must be fitted with the above ancillaries before tying into the main header. The abbreviations on the diagram can been seen below.

1	Isolation Valve	Allow for isolation for maintenance
2	Strainer	Prevents addition of debris into the unit
3	Orifice Plate	Flow rate measurement and verification
4	Auto Air Vent	Required to release air accumulating within system
5	Flexible Connection	Mitigates noise/vibration through pipework

Note – Water-side pressure relief : This connection detail does not include a water-side safety (pressure relief) valve. The provision, sizing, setting and correct location of pressure relief for the closed water circuit is the responsibility of the system designer and installing contractor.

Each of these items should be located on the units flow and return pipework, as illustrated, before connecting to the common header.

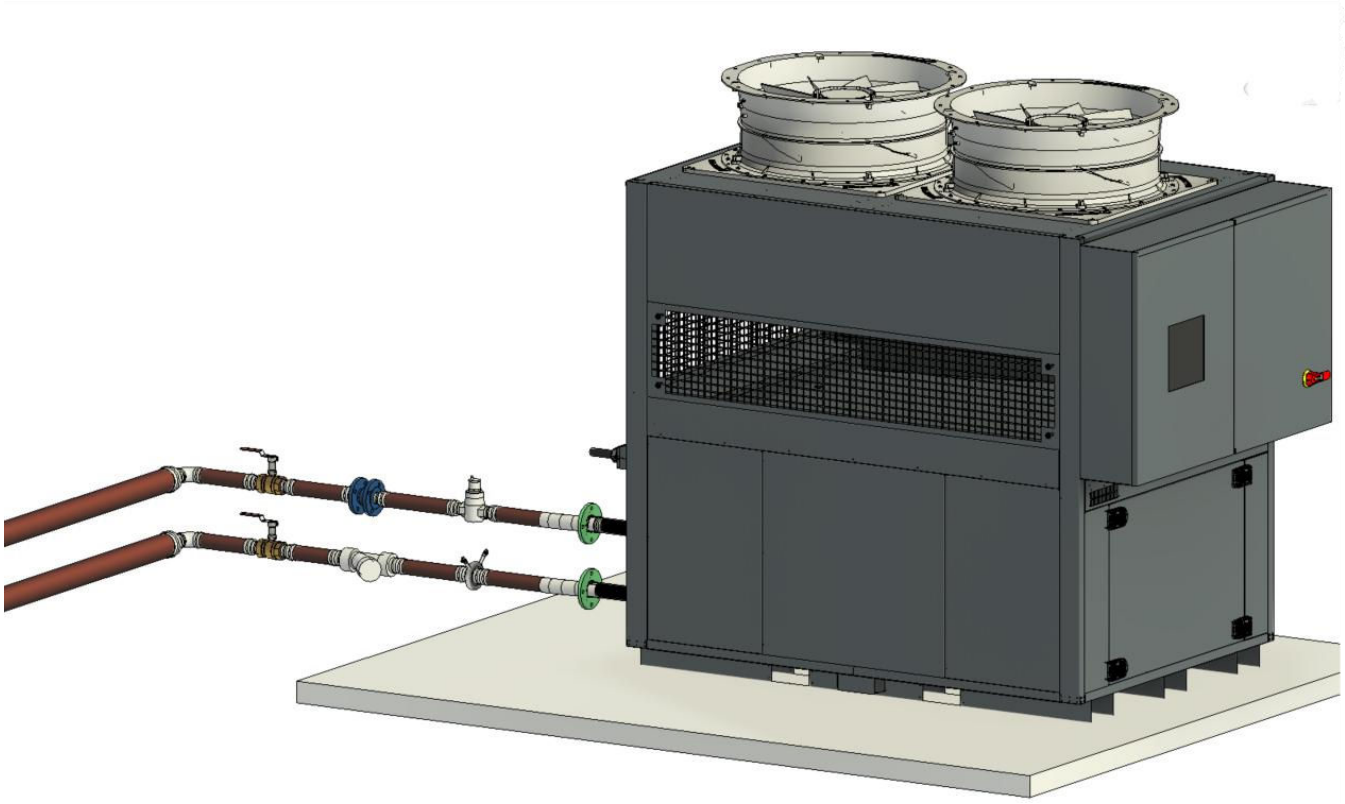

5.1.1 Pipe Connection Sizes

Connection Type	Rowan 3
Heating Flow	65mm Bimetallic Flange
Heating Return	65mm Bimetallic Flange
Condensate	32mm Gland

5.1.2 Header Kits

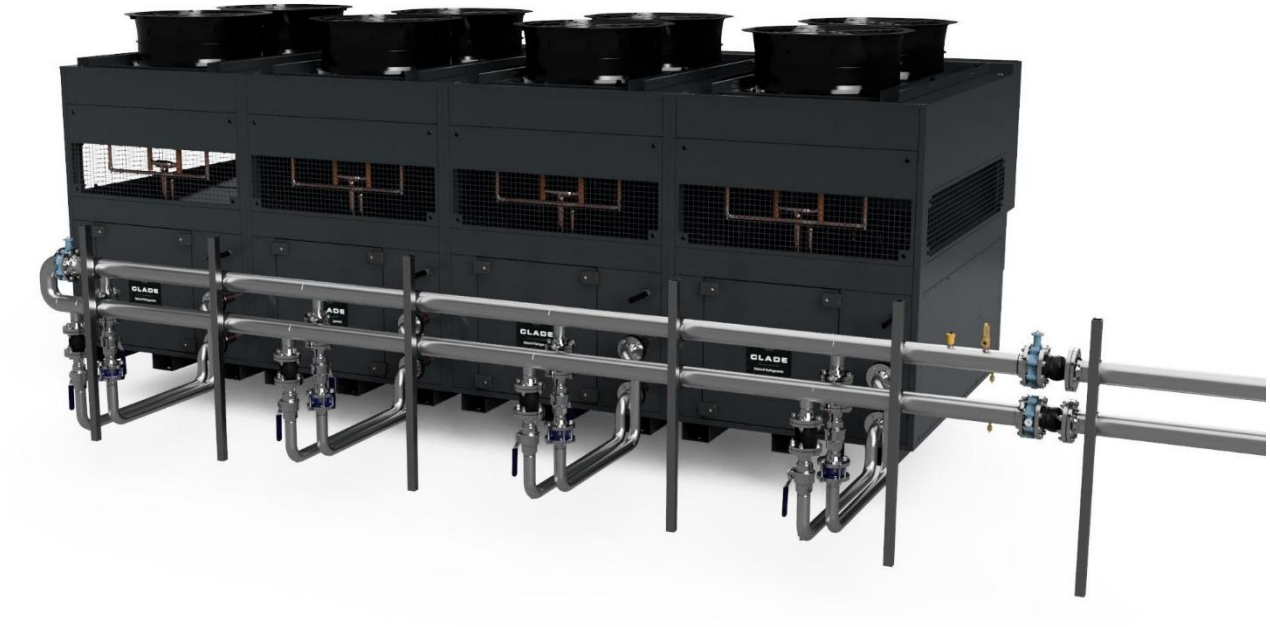

Clade offers pre-manufactured header kits as an optional accessory, supplied alongside Rowan 3 air source heat pump units. These kits allow several units to be hydraulically combined into a single common flow and return arrangement, removing the need for the installer to fabricate bespoke headers on site.

Each kit is supplied as a factory-assembled section complete with all ancillaries required for connection to its associated unit (see 4.1). Sections are modular: they are available individually (single-unit) or as twin (two-unit) sections and may be bolted together to form a combined header serving **up to six units**.
Header sections are combined to suit the number of units on the installation. The table below summarises the standard build-up.

Units served	Section combination
1	1 × single section
2	1 × twin section
3	1 × twin + 1 × single section
4	2 × twin sections
5	2 × twin + 1 × single section
6	3 × twin sections

5.1.3 Freezing Protection

In areas prone to freezing, fit each exterior pipe with a freeze-prevention heater to stop ice from forming. After installing the heater, verify that the pipe joints on the heat pump's inlet and outlet remain at roughly +25°C–even if the outdoor temperature drops to -25°C–to ensure the joints don't fall below 0°C. For different types of pipe materials, consider a self-regulating heater or an equivalent solution that prevents both freezing and overheating.

5.2 Defrost

The ASHPs come with their own hot gas frost protection cycle. This shuts off the internal LTHW flow through the ASHPs and directs hot gas through the evaporation coils removing any ice build-up. To mitigate the loss of output while in defrost, the system buffer vessel must be sized accordingly.

5.2.1 Minimum Free Flowing Water Content

In order to protect the integral components of the unit the unit requires a minimum water content on the primary system side. These represent the minimum storage requirements necessary to protect the heat pump and allow for a maximum of six starts per hour.

	Heating
Minimum water volume (liters)	700

Please Note: This is the minimum volume to protect the compressor and extend the lifespan of the units. If the units are to be controlled on capacity control, there will need to be more volume in the vessel to allow for stratification control.

5.2.2 Optimal Buffer Sizing

While the minimum buffer sizes ensure basic heat pump protection and operational stability, optimally sized buffers enhance system efficiency, reduce cycling frequency, and improve overall performance. Buffer vessel sizing ultimately rests with the system designer however, the following recommendations provide guidance on selecting the ideal buffer capacity to maximise energy efficiency and maintain consistent heating output.

Defrost Cycle Management: Air source heat pumps undergo periodic defrost cycles, during which the heat pump uses hot gas to clear ice from the evaporator. During this period, the buffer vessel provides stored thermal energy to maintain heating supply to the building. The vessel must be sized to cover the full heat load during defrost to prevent temperature drops. Clade recommends a minimum of 15 minutes storage to cover this.

Peak Load Consideration: The buffer volume should accommodate the total peak kWh heating demand of the building while accounting for variations in heat pump output due to defrost.

Building Load Profiles: CIBSE Guide A shows how to perform detailed analysis of building heating load profiles. Factors such as occupancy patterns, thermal mass, and intermittent heating requirements should be evaluated to determine the total time the peak load is required and the necessary storage capacity.

5.2.3 Buffer Design Considerations

To ensure optimal performance and efficiency in heat pump systems, proper buffer vessel design is crucial. A well-designed buffer enhances stratification, maximises usable volume, and provides precise control for charging and discharging cycles. Key aspects of an effective buffer design include:

- Height-to-Width Ratio: A buffer vessel should have a minimum height-to-width ratio of 2.5:1. This geometry promotes better thermal stratification by reducing the potential for mixing between layers, ensuring a stable temperature gradient within the vessel.

- Sparge Pipes: Increases the useable volume of the vessel.

- External Combined Headers: One in one out header based on CIBSE Cp1. Prevents mixing and maintains stratification and is sized to achieve less than 0.3 m/s velocity into the vessel. The header helps maintain stable pressure conditions across both the primary and secondary circuits. This is essential for variable flow systems and avoids issues with fluctuating demand.

- Perforated Baffle Plate: Positioned inside the vessel, the baffle plate ensures an even spread of stratification and helps maintain the cold section at the bottom of the buffer critical for return temperatures.

- Temperature sensors
    - Five temperature sensors distributed vertically within the buffer need to be distributed properly for precise monitoring and adjustments to maintain optimal conditions. When there are multiple buffers, these need to be spread across the vessels evenly.

5.3 System Pressure

All mechanical/LTHW systems require pressure relief equipment to maintain the safe working condition of the system. This will be designed and specified by the system designer/installer.

5.3.1 Safety Valves

Safety valves on the low-temperature hot-water side are compulsory on all Birch installations. Their role is to prevent system pressure from rising above the maximum allowable working pressure, thereby protecting pipework, heat exchangers and ancillary equipment from over-pressure incidents. It is the system designer's or installer's responsibility to select, size and install these valves in accordance with the national standards ensuring correct set pressure, sufficient discharge capacity and proper discharge piping.

5.3.2 Propane Removal Device

In the rare event of a propane leak from the plate heat exchanger into the heating water circuit, there must be a means of separating propane from the heating water and safely venting it to atmosphere. This can be achieved using a degasser, an automatic air vent (AAV), or another device capable of releasing entrained gas from the system.

As contaminated water circulates, dissolved propane comes out of solution and forms gas bubbles at high points and points of pressure drop within the system. The removal device collects this gas and directs it to a vent that discharges safely to the outside atmosphere. This prevents propane from recirculating within the system or accumulating indoors, where it could pose a fire or health hazard.

For systems using propane refrigerant and a plate heat exchanger, it is strongly recommended to provide a reliable means of gas removal at appropriate locations in the circuit. Any device used must be suitable for the duty, and the vent line must comply with EN 378 and terminate in a safe, well-ventilated outdoor location.

5.4 Frost Protection

To prevent freezing of the water circuit, the following frost protection strategy is implemented in all Clade units without internal circulating pumps: When the leaving fluid across the unit falls below 7 °C, the primary circulating pump is enabled. The pump will continue to run until the unit's flow sensor and return sensor detect that the fluid temperature has increased to 10 °C. This control logic assumes that heat is available within the external pipework from trace heating, which must be designed, installed, and maintained by the system designer/contractor.

Trace Heating Responsibility: Clade does not supply or control external trace heating. It is the designer's responsibility to ensure that pipework is correctly insulated and equipped with trace heating to maintain minimum fluid temperature during periods of low ambient conditions or unit inactivity.

When Primary Pumps Are Not Controlled by Clade:

If the primary pump(s) are controlled by an external BMS or by-site strategy, Clade cannot guarantee frost protection of the unit. In this scenario, the BMS designer must ensure that the pumps are enabled in synchronisation with the frost thresholds defined above or provide an equivalent strategy to maintain water temperatures above 7 °C. Failure to run the pumps as described may result in localised freezing of the heat exchanger and external pipework, potentially causing permanent damage. Such damage is outside the scope of Clade warranty.

6 Electrical Installation

6.1 Electrical data

6.1.1 Supply voltage 400/3/50+N

Rowan 3		Heating
F.L.A. - Full load current at max admissible conditions (per phase)		
F.L.A. - Total	A	59.3
M.O.C. - Max Operating Current		
M.O.C. - Total	A	84.1
F.L.I. - Full load power input at max admissible conditions		
F.L.I. - Total	kW	37.4
M.I.C. - Maximum inrush current		
M.I.C. - Total	A	252.3

Power supply 400/3/50 (+ NEUTRAL) +/- 10%. Maximum Phase Unbalance: 2%.
For non-standard voltage please contact Clade technical office

6.1.2 Mains Supply Installation

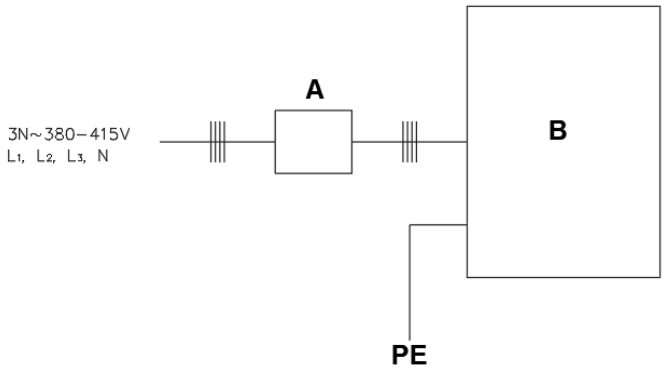

A: Upstream Protection (by others)
B: ASHP

6.1.3 Power Supply Details

SN + LN	External power supply		
	Power supply	Switch manual	Local Protection
Rowan 3	380-415V 3N~ 50Hz	125A (pre mounted)	125A

Each Rowan 3 ASHP requires a dedicated 400/3/50 +N power supply with tolerance ±10% and a maximum allowable phase imbalance of 2%.

- Each unit is supplied with its own local isolator and MCB 10KA C Curve 3 Pole protection device protection device.
- Upstream protection must be provided by the installer and correctly sized to suit the unit's full load and inrush currents (see Section 4.1).
- Cable sizing must consider local climatic conditions, service routes, ambient temperature, installation method, and grouping factors.
- The electrical installation must comply with BS 7671:2018 (IET Wiring Regulations) or the equivalent national wiring regulations in the country of installation.

⚠ CAUTION

- Always use correctly rated fuses or breakers. Incorrectly sized protective devices may result in malfunction, overheating, or fire.
- Ensure cables are adequately supported and that no external mechanical stress is imparted on terminations. Loose or stressed connections can cause overheating and arcing.

6.1.4 Terminal Block Arrangement

Each Rowan 3 heat pump is fitted with glanding for the incoming mains supply.
The termination entry point is identical across the entire Rowan 3 range and is positioned on the rear, right-hand side of the unit (refer to the illustration below).

- Route supply conductors through the bottom of the factory-installed termination box which is indicated in the figure below.
- Size all supply cables in accordance with the full load current (FLA) of the unit (see Electrical Data section).
- Tighten all terminals to the torque values specified on the terminal-strip label.
- There is then cable gland directly above the termination box to route cable into the unit.

⚠ CAUTION

Earth tabs must be reconnected prior to refitting access panels

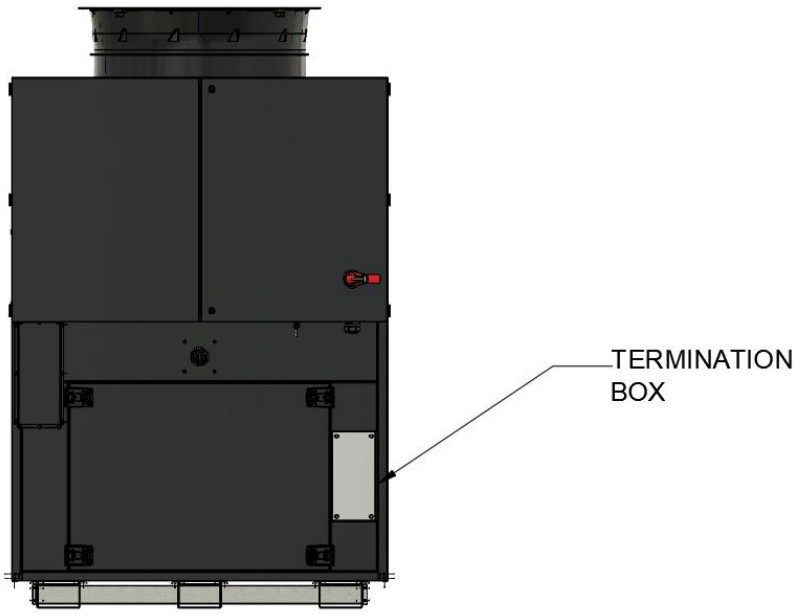

6.1.5 Maximum Cable Sizes

Maximum copper conductor cross-sections for the mains supply terminations are as follows. These are the maximum sizes the terminal blocks can accept – actual cable size must be determined by the installing electrician in accordance with BS 7671:2018.

Model SN + LN	Maximum Cu cable cross-section (mm²)
Rowan 3	50

⚠ WARNING

Be sure to use specified wires and ensure no external force is imparted to terminal connections. Loose connections may cause overheating and fire.

⚠ CAUTION

Only use properly rated breakers and fuses. Using a protection device of the wrong size may cause the unit to malfunction or set fire.

6.1.6 Control Connections

The following control cable specifications are required:

Remote controller cable size	0.3 - 1mm² Shielded cable recommended to minimise electrical interference.
Cable between units and controllers	Cat 5/6 data cable

7 Controls

7.1 Controls Overview

7.2 Individual Heat Pump Controls

Each heat pump is equipped with its own integrated, independent control system. The unit operates on a compressor-lead strategy: the compressor to meet flow temperature demand, while the integrated pump modulates independently to maintain the target flow temperature. This allows the unit to maintain runtime under elevated return conditions by varying water-side flow through the plate heat exchanger.

7.2.1 Off/On Switch

The Off/On switch selects the operation of the heat pump. Selecting the on position will start the heat pump. Selecting the Off position will instigate a stop sequence and stop the heat pump from running. The heat pump will continue to run for a short period until it has completed the stop sequence.

⚠ CAUTION

The Off/On switch should not be used in an emergency. Any emergency isolation should be carried out at the local isolator.
The inverter should be fully discharged, prior to removal of the compressor terminal box cover.

7.3 Control Type

There are two options for the method of control on the heat pump (multiplex & local control). These will be described in the following sections and visualized below.

Option 1 - Multiplex mode with Clade Buffer Controller

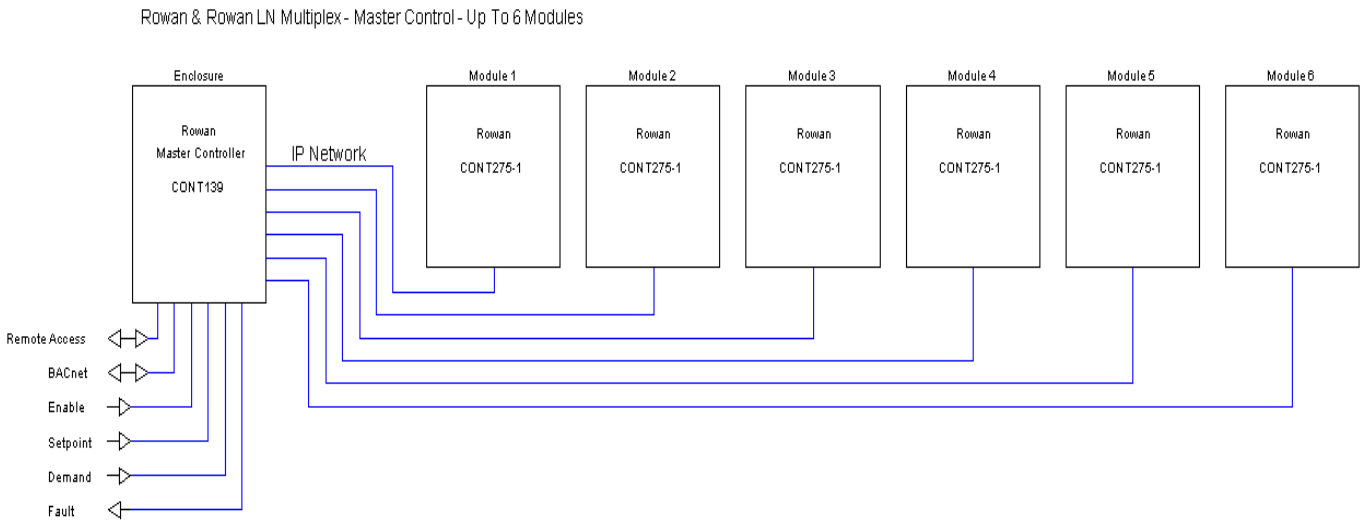

Option 2 - Local Mode

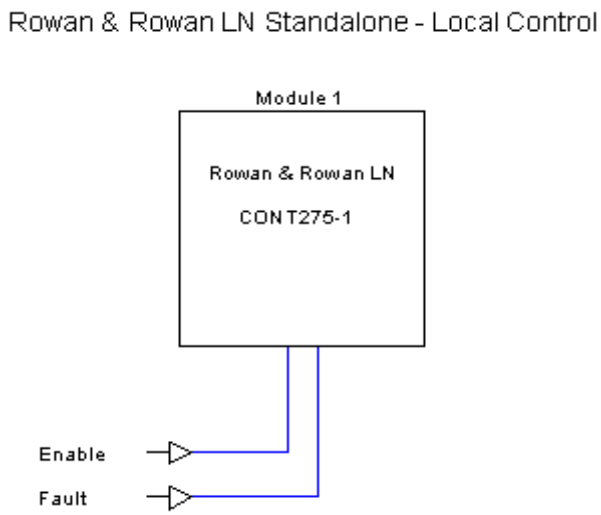

7.4 Clade Buffer Controller

7.4.1 Multiplex Control

Multiplex control should be used when the heat pump is to be controlled by a Clade Buffer Controller.
This enables coordinated control of multiple heat pumps as a single system around a common buffer vessel.

NOTE: Should the return water temperature exceed the configured high-return shutdown threshold, the unit will initiate a high-return fault and stop immediately.

The Clade controller generates a single system demand signal (0–100%) and apportions it across the connected heat pumps to stage units in and out in line with instantaneous load. Demand is derived from two simultaneous targets:

Target A – Buffer energy state

Multi-point sensing within the buffer vessel (typically probes T1–T5) is used to estimate the vessel's usable thermal charge. An internal weighting and normalisation routine produces a Buffer Charge Index. As the vessel approaches its calibrated "full" condition (accounting for stratification), the index tapers so that additional capacity is requested progressively less aggressively.

Target B – Return protection

The controller monitors either the common heat-pump return or the lowest vessel sensor (typically T7 or T5) against a protected maximum return limit. The deviation below this limit generates a Return Temperature Assist signal via a calibrated proportional slope with built-in damping. This biases capacity upward when return water is comfortably below the limit, and backs capacity off as the limit is approached.

Blending of targets

The demand signal is derived from a proprietary mapping that blends the Buffer Charge Index with the Return Temperature Assist. The resulting demand (0–100%) is divided across the available heat pumps to determine staging increments for each unit.

An optional, selectable weather compensation function is available within the controller. By progressively lowering the flow temperature in response to higher outdoor temperatures, this mode optimises seasonal efficiency and delivers higher coefficients of performance.

Clade Buffer Controller will be installed as a standalone unit. The heat pumps will connect to the Clade controller by CAT5 or 6 cable between the two units, installed by the contractor as below.

7.4.2 Clade Buffer Controller Wiring

Network layout

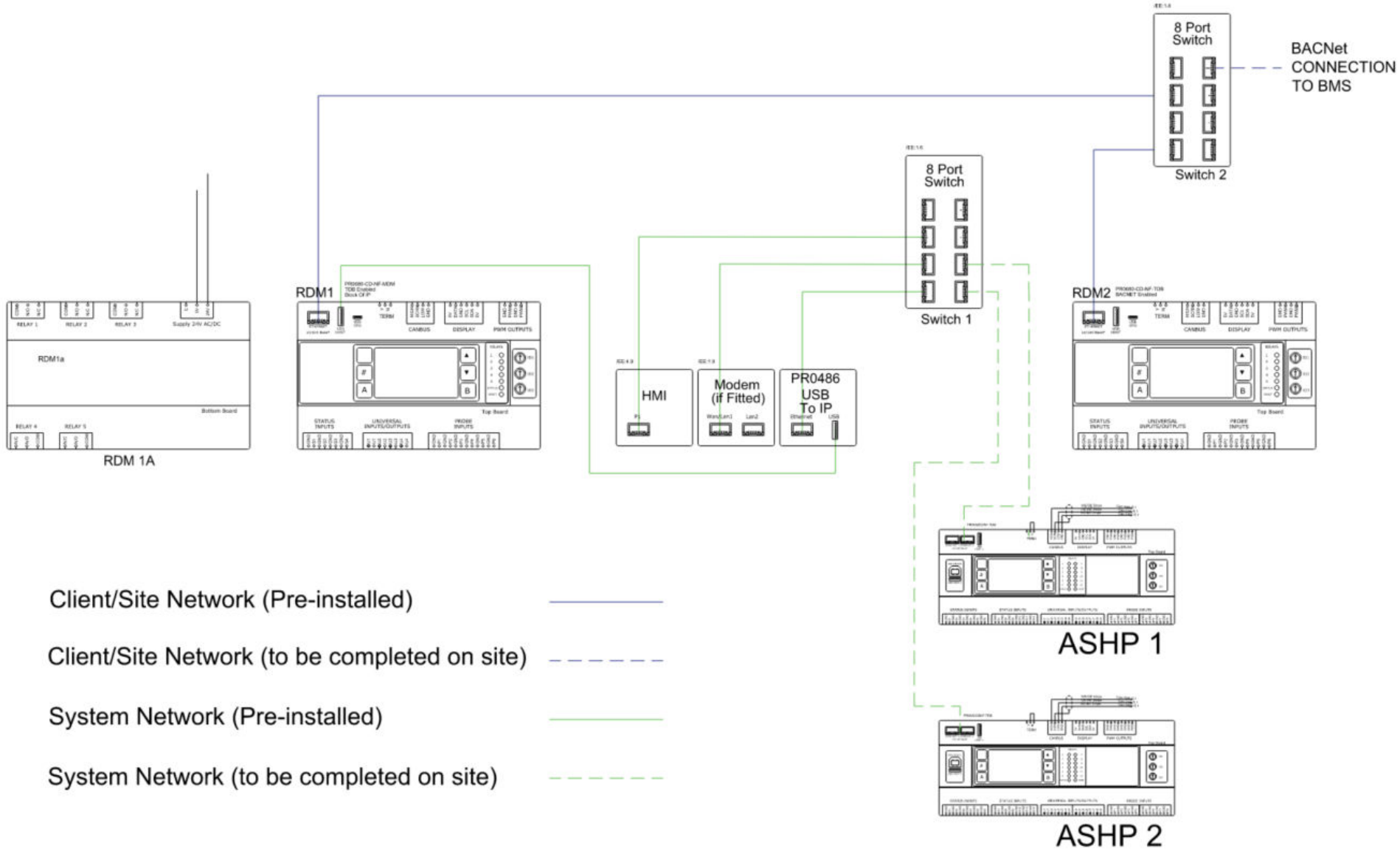

Terminal Layout

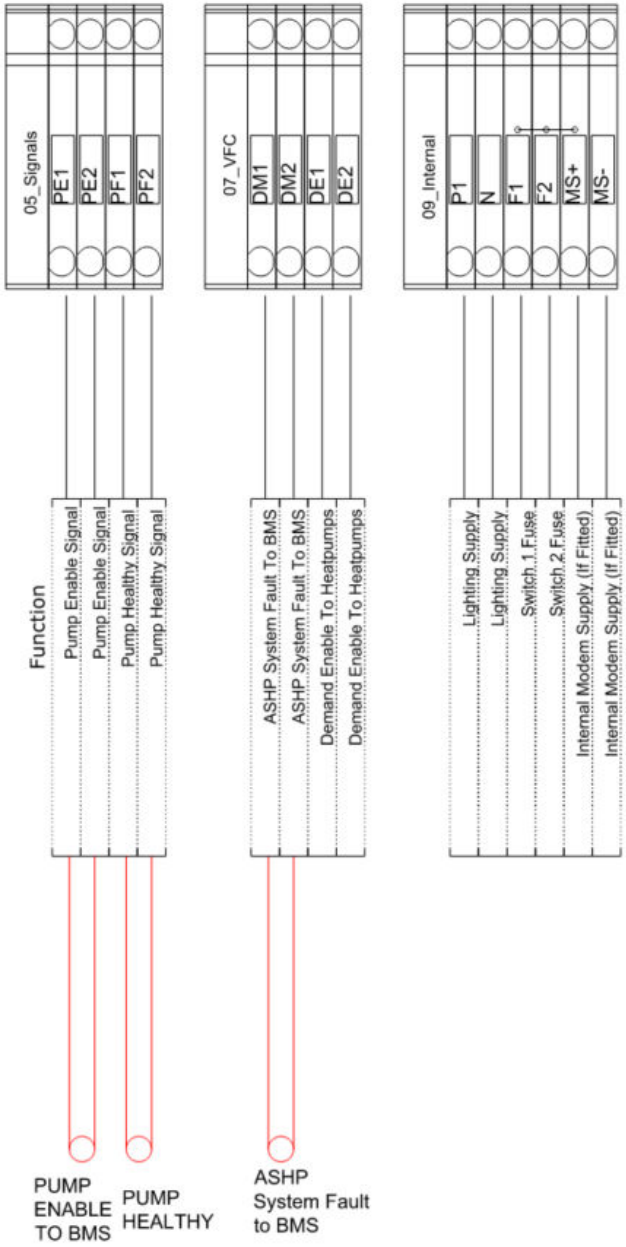

Terminal Layout
01_0-10v

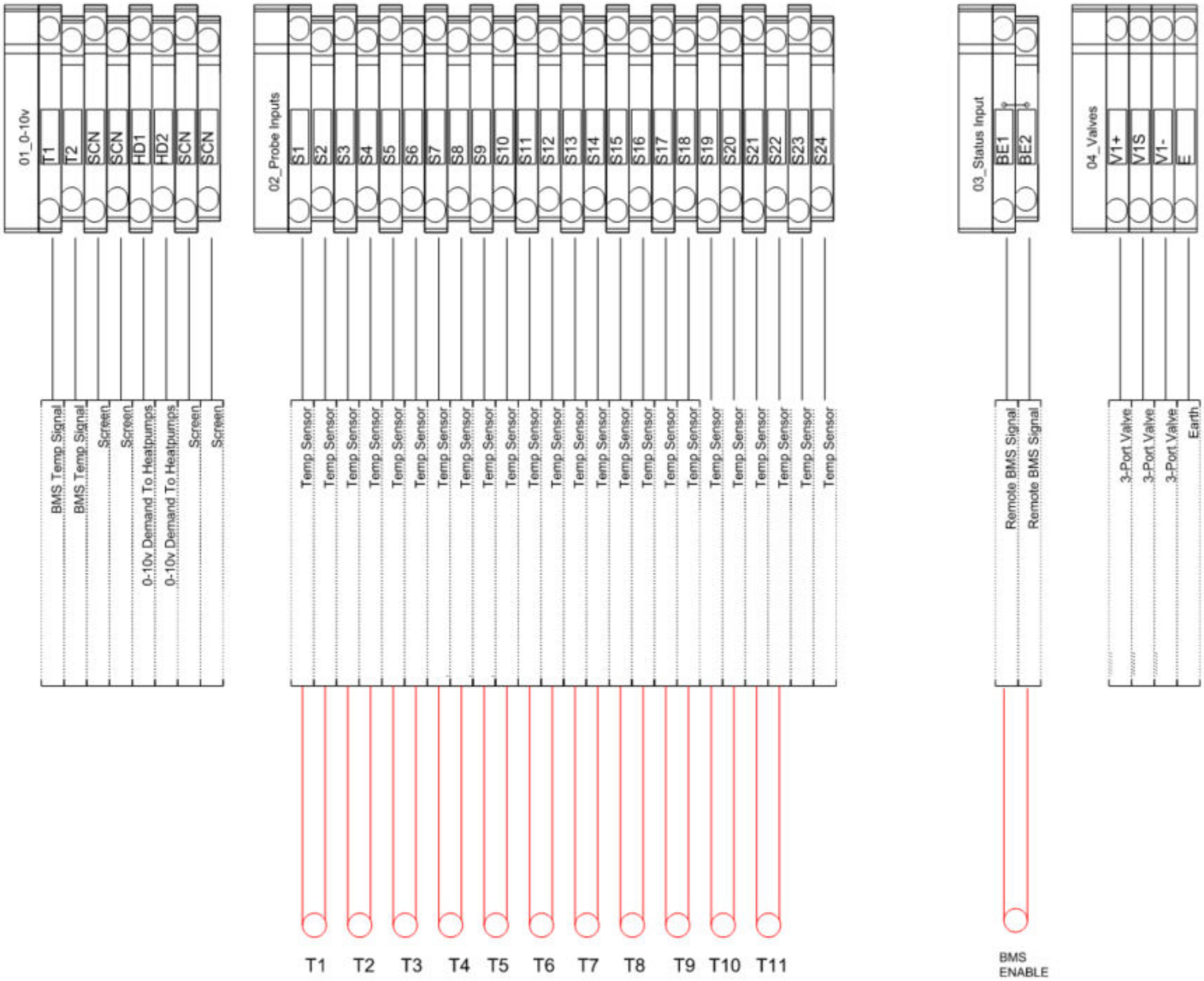

7.4.3 Heat Pump Data

A single connection to the Clade Buffer Controller is all that is required to access all connected heat pump data. If the client wishes to monitor or log this data via their Building Management System, the Clade controller can be integrated through its BACnet interface. The table below details the data points available via the BACnet connection from the Clade controller:

Clade Buffer Controller (large)				
Device Name		**BACnet**		
Inst.-No.		**280028**		
Obj. Type	**Object Name**	**Description**	**Unit**	**Read/Write**
BO	obj_1	System Healthy	On=Healthy / Off=Fault	Read
AO	obj_2	Ambient Temp	°C	Read
AO	obj_3	ASHP Target Temp	°C	Read
AO	obj_4	Heating Demand	%	Read
AO	obj_5	T1 Temp	°C	Read
AO	obj_6	T2 Temp	°C	Read
AO	obj_7	T3 Temp	°C	Read
AO	obj_8	T4 Temp	°C	Read
AO	obj_9	T5 Temp	°C	Read
AO	obj_10	T6 Temp	°C	Read
AO	obj_11	T7 Temp	°C	Read
AO	obj_12	T8 Temp	°C	Read
AO	obj_13	T9 Temp	°C	Read
AO	obj_14	T10 Temp	°C	Read
AO	obj_15	T11 Temp	°C	Read
AO	obj_16	T12 Temp	°C	Read
AO	obj_17	HP1 Status	*See Status Table	Read
AO	obj_18	HP1 P11 Flow Temp	°C	Read
AO	obj_19	HP1 P12 Return Temp	°C	Read
AO	obj_20	HP2 Status	*See Status Table	Read
AO	obj_21	HP2 P11 Flow Temp	°C	Read
AO	obj_22	HP2 P12 Return Temp	°C	Read
AO	obj_23	HP3 Status	*See Status Table	Read
AO	obj_24	HP3 P11 Flow Temp	°C	Read
AO	obj_25	HP3 P12 Return Temp	°C	Read
AO	obj_26	HP4 Status	*See Status Table	Read
AO	obj_27	HP4 P11 Flow Temp	°C	Read
AO	obj_28	HP4 P12 Return Temp	°C	Read
AO	obj_29	HP5 Status	*See Status Table	Read
AO	obj_30	HP5 P11 Flow Temp	°C	Read
AO	obj_31	HP5 P12 Return Temp	°C	Read
AO	obj_32	HP6 Status	*See Status Table	Read
AO	obj_33	HP6 P11 Flow Temp	°C	Read
AO	obj_34	HP6 P12 Return Temp	°C	Read
AO	obj_35	HP7 Status	*See Status Table	Read
AO	obj_36	HP7 P11 Flow Temp	°C	Read
AO	obj_37	HP7 P12 Return Temp	°C	Read
AO	obj_38	HP8 Status	*See Status Table	Read
AO	obj_39	HP8 P11 Flow Temp	°C	Read
AO	obj_40	HP8 P12 Return Temp	°C	Read
***Status Table**				
0=Off				
1=Heating				
2=Defrost				
3=Satisfied				
4=Initialising				
5=Fault				
6=Not Present				
7=Offline				

7.5 Local control

Selecting LOCAL control means the heat pump will control without any external control signals. This should be selected when there is no BMS 0-10V capacity control input or Clade Buffer Controller input. Selecting this control type means the unit will operate on return temperature control.

Flow Temperature and Return Temperature Control

When the return water temperature rises into the designated delta-temperature (ΔT) range, the heat pump automatically reduces its heat output. This reduction lowers the pump's flow rate while still maintaining the desired flow temperature. Conversely, if the return water temperature drops, the heat pump's heating capacity increases, thereby increasing the flow rate to maintain a constant flow temperature.

High Return Water Condition

If the return water temperature increases further, the system will trigger a high return water stop condition. In this state, the heat pump switches to a 'Satisfied' status, indicating that the required heating has been met. The heat pump will resume its normal 'Heating' mode once the return water temperature drops enough so that the temperature difference exceeds the reactivation threshold.

No BACnet data is available in this mode. For BACnet data availability a Clade Buffer Controller must be purchased

8 Wiring Diagrams

8.1 Rowan 3 Power Wiring

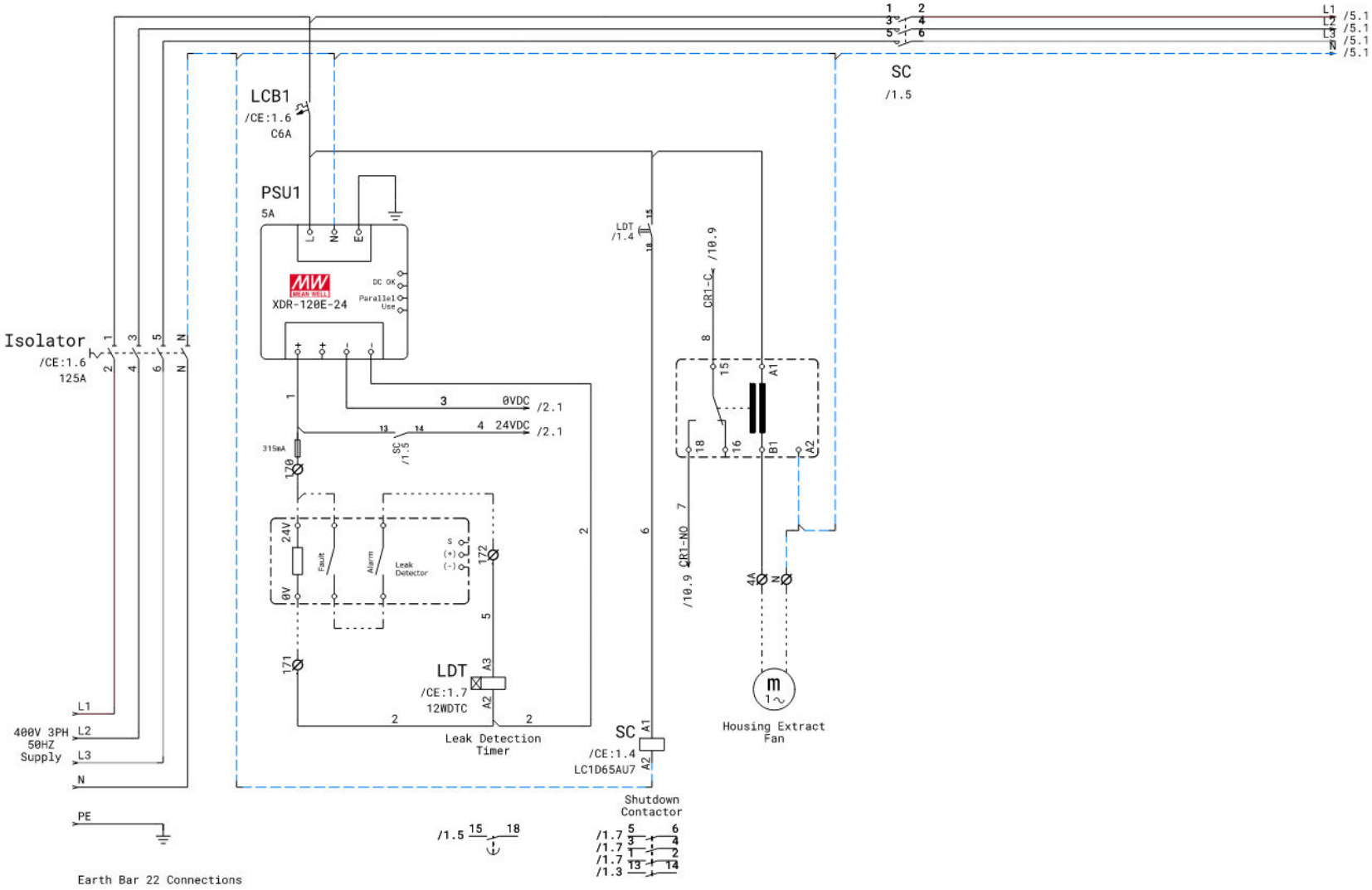

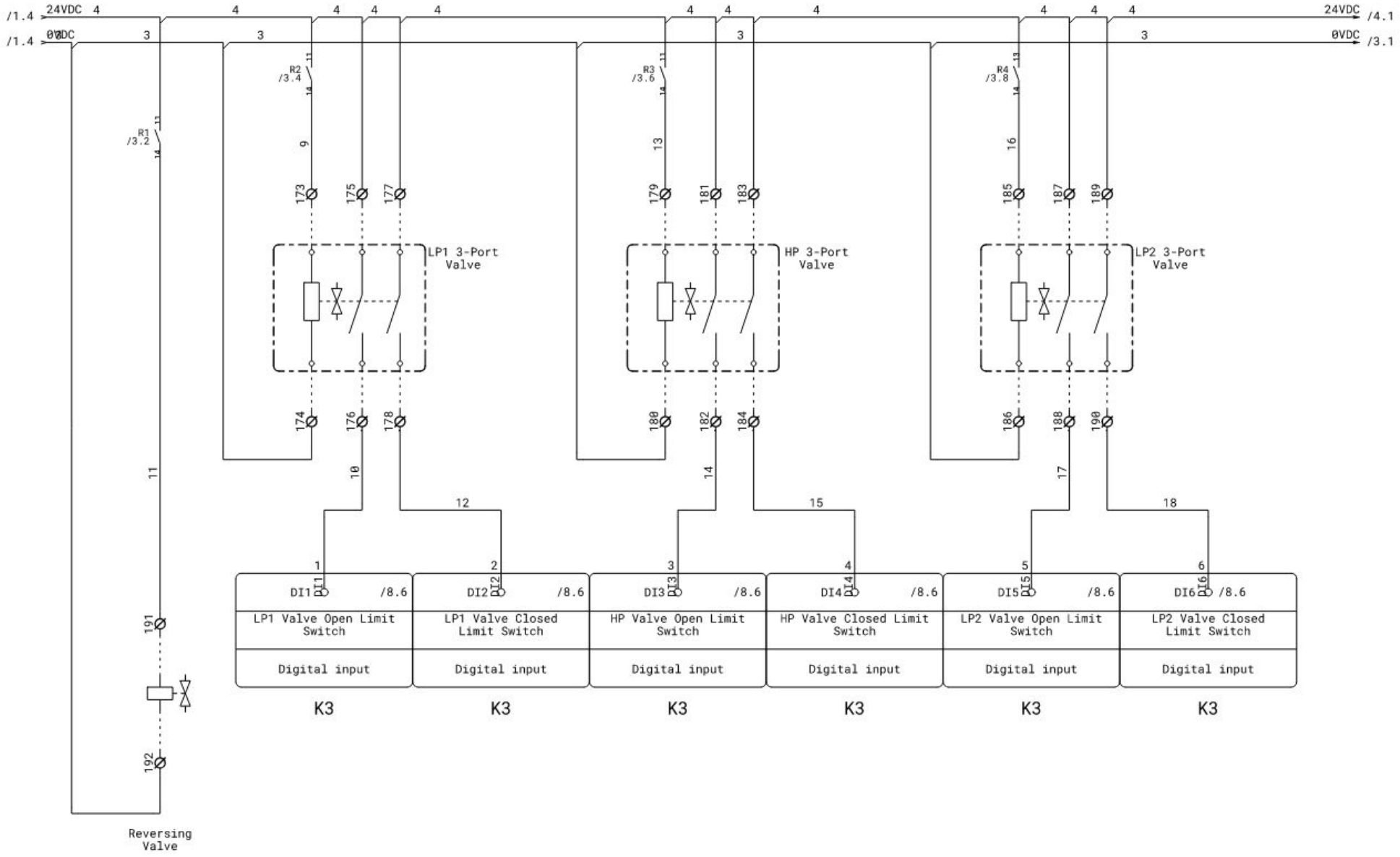
/1.4 24VDC
/1.4 0VDC
24VDC /4.1
0VDC /3.1
R1 /3.2
R2 /3.4
R3 /3.6
R4 /3.8
LP1 3-Port Valve
HP 3-Port Valve
LP2 3-Port Valve
DI1 /8.6
DI2 /8.6
DI3 /8.6
DI4 /8.6
DI5 /8.6
DI6 /8.6
LP1 Valve Open Limit Switch
LP1 Valve Closed Limit Switch
HP Valve Open Limit Switch
HP Valve Closed Limit Switch
LP2 Valve Open Limit Switch
LP2 Valve Closed Limit Switch
Digital input
K3
Reversing Valve

9 Pre-Commissioning Checklist

9.1 Pre-requisites

Commissioning of the heat pump cannot proceed until the system has been fully installed, flushed, filled, pressurised and made ready to accept load. The works listed in this section are the responsibility of the installing contractor and must be complete and verified before Clade attends site. The pre-commissioning form must be completed and returned to Clade a minimum of 3 weeks prior to the agreed commissioning date.

Site Access / Installation / Water System		
	Item	Confirmed / Detail
1	Mains power connected, energised and available at the unit and the control panel.	
2	Buffer vessel(s) filled, pressurised, cold and connected to the primary circuit.	
3	Minimum free-flowing water volume satisfied	
4	System flushed, cleaned, pressure-tested and filled ready to run; flushing/dosing RAMS available.	
5	Water quality tested to BS 8552; photographic / certification evidence provided.	
6	LTHW safety valves, expansion and pressurisation provision installed (system designer / installer scope).	
7	Frost protection / trace heating installed and operational on external pipework (system designer scope).	
8	Heat pump(s) installed fully in accordance with the manufacturer's installation instructions.	
9	Full access available around the entire unit; safe access, lifting provision and site readiness confirmed.	
10	No physical or transit damage to the unit; any damage reported to Clade before the visit.	
11	Any site-specific Health & Safety concerns or access requirements identified and detailed.	

Electrical		
	Item	Confirmed / Detail
1	Mains power connected and available	
2	Installed protection device amp	

Site / System Design Conditions		
	Item	Confirmed / Detail
1	Binder points/ Orifice plate available for flow measurement at each unit	
2	Commissioning set installed on the common primary LTHW – make / model / DN and dial position recorded.	
3	Each heat pump flow rate checked and confirmed against design – individually and with all units running.	
4	Secondary side system flow rates checked and confirmed.	
5	System design drawing issued confirming hydraulic arrangement and design.	
6	Mechanical engineer to attend on the commissioning day to check flow rates and commissioning-valve settings.	
7	A means of dissipating the combined full rated output of all units is available throughout the visit, allowing every unit to be run and held at full capacity. This may be genuine secondary-side load or a temporary heat-dump / load-bank arrangement; it must hold return temperature within the operating envelope while absorbing full output.	

Controls		
	Item	Confirmed / Detail
1	Clade controller type and quantity confirmed	
2	Control mode confirmed per the installation manual (e.g. BMS, multiplex).	
3	All field wiring to Clade controllers complete; probes installed PT1000 probes	
4	BMS enable signal to the heat pumps / controllers present, tested and operational.	
5	BMS engineer available on site to provide multiple enable signals for testing units at different conditions.	
6	Ambient-adjust flow temperature setpoint requirement confirmed; where required, BMS set up with 0-10 V signal to the heat pumps / master controller.	
7	Description of Operation (Des Ops) document available and attached, confirming intended BMS operation.	
8	BACnet connectivity requirement confirmed; where required, 2 no. IP addresses provided within the same range (see BACnet User Guide for default addresses).	

10 Planned Preventative Maintenance

10.1 Maintenance Obligation

The unit is a complex machine. The performance of the unit and the integrity of its internal parts and devices both degrade in the absence of planned maintenance. Planned preventative maintenance in accordance with this section is mandatory and is a condition of the Clade product warranty.

Maintenance must be carried out by an engineer competent in the refrigerant and the technology concerned

10.2 Recording of Results

Recorded values are required, not confirmation ticks. A record showing only that a task was completed has limited value in diagnosing developing faults and will not be accepted as evidence of maintenance.

The completed maintenance record must be:

- completed on the Clade PPM form current at the date of the maintenance.
- Signed by the attending engineer
- Accompanied photographs and a site audit pro report that documents timestamps
- issued to the site operator for retention in the operation and maintenance manual; and submitted to Clade within 28 days of the visit.

Records must be retained for the full duration of the warranty period and produced on request.

10.3 Effect on Warranty

The Clade product warranty is conditional upon the unit being maintained in accordance with this section and upon the evidence required being produced.

Where a warranty claim is made, Clade will require the maintenance records for the whole period from the commissioning date to the date of the claim. Where those records cannot be produced, or where they show that the required maintenance has not been carried out at the required intervals, Clade reserves the right to decline the claim or to attend on a chargeable basis.

Clade will not accept warranty liability for any failure caused by, or contributed to by, a failure to maintain. This includes, but is not limited to:

- fouled, blocked or damaged evaporator coils, causing loss of capacity, high discharge pressure or compressor failure;
- blocked strainers, closed or partially closed valves, fouled plate heat exchangers, or any other cause of low flow, reduced temperature difference, low-pressure tripping or freeze damage;
- deterioration of system water quality, or loss of inhibitor or glycol concentration, causing corrosion, fouling or freeze damage;
- loss of system pressure, or failure of expansion or pressurisation provision;
- electrical terminations that have not been inspected and re-torqued;

Where Clade attends site under warranty and the fault is found to arise from any of the above, the visit will be chargeable at the prevailing rate, including travel, labour and parts.

10.4 Scope of Works

The table below sets out the minimum scope. It is the minimum, not the limit: where site conditions or the condition of the unit indicate additional work, that work must be carried out and recorded.

Site:	
Job No:	
Serial No:	
Refrigerant:	
Date:	
Completed By:	

	Task Number	Task		
Pre PPM Works	1	Sign in and make site aware of presence		
		Remove Evaporator Cowling		
		Ensure ASHP is in operation		
		Check Localised water feed operational (for Jetwashing)		
		Ladders and Tools out and ready		
		OFN bottle with gauge to test HP Block		
		Ensure correct PPE is worn at all times		
	Task Number	**Task**	**6 Month**	**12 Month**
ASHP	2	Check HP running pressure - note		
	3	Check HT suction pressure - note		
	4	Check all compressors are operational (force start other compressors)		
	5	Report any noisy compressors		
	6	Check compressor overloads are rated above FLA		
	7	Clamp compressor overloads/contactor - note amps		
	8	Check compressor oil levels		
	9	Check any crankcase heaters are operational		
	10	Visual Check PRV note rating		
	11	Check refrigerant charge - specify level and type		
	12	Check panel/housing cooling fans are operational & guarded		
	13	Check any LP safety switches are set above zero		
	14	Check HP safety cut out - note		
	15	Replace suction line drier only if temperature difference noted (**must be 12m**)		
	16	Check oil pressure where applicable		
	17	Change oil filters and oil (**Every 12 months**)		
	18	Check all pack ball valve caps are tight		
	19	Check all probes are secure - if fitted		
	20	Leak test all ASHP including, Liquid Receiver, Drier Assembly, Evaporator & Pipework		
	Task Number	**Task**	**Result**	
EVAPORATORS	21	Check all fans operate		
	22	Check rotation of all fans		
	23	Check all fans, blades & guards secure		
	24	Check Evaporator fan overloads are rated above FLA		
	25	Clamp evaporator fan overload/contactor - note amps		
	26	Brush down and wash coil		
	Task Number	**Task**	**6 month**	**12 month**
ELECTRICAL	27	Visible inspection of all electrical connections in panel and check for signs of deterioration		
	28	Check the panel isolators operate correctly		
	29	Check panel indication lamps for operation		
	30	Ensure all contactors and electrical connections are sound		
	31	Check power cables for signs of overheating		
	32	Ensure all equipment is switched on		
	Task Number	**Task**	**6 month**	**12 month**
COMPLETION	33	Clean ASHP - Compressor rack, and external panels		
	34	Check temperature alarms have cleared prior to leaving		
	35	Inspect controls (system) for correct operation		
	36	Close / lock doors		
	37	Tidy away ensuring site is clear of rubbish		
	38	Complete Contractor Sign In/Sign Out process and hand in keys/passes		
	Task Number	**Task**	**6 month**	**12 month**
REMOTE MONITORING EQUIPMENT	39	Annual PPM visit on Remote Monitoring Equipment		

CLADE

Head Office & Registered Office
Bristol & Bath Science Park, Dirac Crescent, Emersons Green, BRISTOL BS16 7FR

The Technology Centre
Unit R3 Gildersome Spur Industrial Estate, Stone Pits Lane, Morley, LEEDS LS27 7JZ