Acer 2 ULN Ultra Low Noise

Heating ASHP

Planner Manual

PD-AcerULN-03

Version: 1.2

Contents

1 General Specifications 4
1.1 Features and benefits 4
1.1.1 Energy Efficiency 4
1.1.2 Functionality 4
1.1.3 Modular design 4
1.1.4 Technology 5
1.1.5 Serviceability and Maintenance Access 5
2 Technical Specification 6
2.1 Standard & Low Noise Unit Technical Specifications 6
2.1.1 Minimum and Maximum kW output: 6
2.2 Refrigerant Information 7
2.2.1 Characteristics of R744 refrigerant 7
2.3 Dimensions 8
2.4 Service Connections 9
2.5 Installation Space Requirements 10
2.5.1 Single Unit Installation 10
2.5.2 Clearance Above the Unit 11
2.5.3 Multiple Unit Installation 12
2.5.4 Wall Heights 14
3 Technical Data 15
3.1 Performance Data 15
3.2 Construction Table 16
3.4 Noise 18
3.4.1 Vibration Isolation 18
3.4.2 Installation Acoustic Corrections 18
3.4.3 Noise Calculation 18
3.5 Glycol use correction factors 19
3.6 Operating Ranges 20
3.6.1 Heating 20
3.7 Pressure Independent Control Valves 21
3.7.1 Primary Pump Control 21
3.8 Internal Exchanger Pressure Drops and Admissible Water Flow Rates 22
3.8.1 Heating 22
3.9 Performance data 23
3.9.1 Acer 2 ULN ..... Error! Bookmark not defined.
4 Electrical Installation 25
4.1 Electrical data 25
4.1.1 Supply voltage 400/3/50+N 25
4.2 Mains Supply Installation 25
4.2.1 Power Supply Details 25
4.2.2 Terminal Block Arrangement 26
4.2.3 Maximum Cable Sizes 28
4.2.4 Control Connections 28
5 Hydraulics 29
5.1 Piping Connections 29
5.1.1 Pipe Connection Sizes 30
5.1.2 Freezing Protection 30
5.2 Defrost 31
5.2.1 Minimum Free Flowing Water Content 31
5.2.2 Optimal Buffer Sizing 31
5.2.3 Buffer Design Considerations 32
5.3 System Pressure 33
5.3.1 Safety Valves 33
5.3.2 Bursting Disc 33
5.4 Frost Protection 34
6 Unit Installation 35
6.1 General Installation notes 35
6.1.1 Site Selection Criteria 35
6.1.2 Structural Requirements 36
6.1.3 Minimising Vibration 36
6.1.5 Pressure Relief Valve Refrigerant Side 38
6.1.6 Condensate 38
6.1.7 Freezing Prevention 39
6.2 Water quality 40
6.2.1 General Requirements 40
6.2.2 New Systems 40

6.2.3 Existing Systems 40
6.2.4 Water Filter 40
6.2.5 Anti-freeze Solutions 41
6.2.6 Minimum Water Quality Requirements for Acer 2 ULN Units 41
6.3 Lifting Centers and Structural Loading Points 42
6.3.1 Structural Loading Points 42
6.3.2 Lifting Centers 43
6.4 Maintenance and Serviceability 44
6.4.1 Maintenance Requirement 44
7 System Configuration 45
7.1 System Schematics 45
7.1.1 General Arrangement Heating Mode 46
7.1.2 ASHP Shunt Pump and Low flow Bypass 47
8 Controls 48
8.1 Controls Overview 48
8.1.1 Off/On Switch 48
8.2 Control Type 48
8.3 Clade Buffer Controller 49
8.3.1 Control 49
8.3.2 Installation 49
8.3.3 Multiplex System Network Diagram 50
8.3.4 Heat Pump Data 53
8.4 BMS Control 54
8.5 Local control 55

1 General Specifications

1.1 Features and benefits

1.1.1 Energy Efficiency

The Acer 2 ULN has been designed, tested and independently assessed to ensure consistent, verified performance in real-world UK operating conditions. Performance data is derived from testing conducted in accordance with EN 14511.

R744 Natural Refrigerant: The Acer uses Carbon Dioxide (R744) as its refrigerant, a naturally occurring substance with a Global Warming Potential (GWP) of 1 and an Ozone Depletion Potential (ODP) of zero. R744 is non-flammable (Safety Class A1) and non-toxic at the concentrations relevant to normal operation. Operating on a transcritical cycle, it offers excellent performance where low return temperatures can be achieved, making it particularly well suited to high flow temperature and domestic hot water applications. With no long-term atmospheric accumulation risk and a GWP an order of magnitude below even low-GWP synthetic alternatives, it is a future-proof choice as F-gas regulations continue to tighten.

SCOP: Achieves a high Seasonal Coefficient of Performance of 3.1*

1.1.2 Functionality

Wide Operating Range: Suitable for a broad range of outdoor temperatures, from extremely low ambient conditions to warmer climates. This flexibility ensures year-round heating reliability.

Minimum/Maximum Outdoor Temperatures: -15°C to +40°C

Minimum/Maximum Flow Water Temps: From 55°C up to 70 °C

Higher return temperature: Accommodates return temperatures up to 45 °C, maintaining efficiency in high-delta-T hydronic networks and facilitating straightforward retrofits to existing systems.

1.1.3 Modular design

Cascade Operation: The Acer 2 ULN is designed for operation as part of a multi-unit array of up to 6, controlled via the Clade Modular Controller. Multiple modules can be linked to increase total installed capacity or to provide system redundancy. This allows large heating loads to be met by standardised modular equipment rather than bespoke single units, simplifying procurement, maintenance, and future expansion.

N+1 Redundancy: The Clade Modular Controller continuously monitors the operational status of each module in the array. In the event of a fault, the affected unit is isolated, and the remaining units continue to operate, redistributing the load automatically. This eliminates single points of failure and is particularly important in applications where loss of heating would have significant operational or safety consequences.

Load-Sharing Logic: When multiple heat pumps operate in multiplex mode with a Clade Buffer controller, run-hours and capacity demands are automatically balanced. This ‘duty cycling’ optimises efficiency and extends equipment life by preventing uneven wear.

1.1.4 Technology

Inverter Technology: The Acer 2 ULN uses variable-speed DC inverter drives on both the compressor and evaporator fans. This allows continuous modulation of output to match actual building demand, rather than cycling between fixed-speed on/off states. The practical benefits are improved part-load efficiency, reduced acoustic output at lower loads, and more stable water outlet temperatures with reduced thermal shock to the system.

Pressure Independent Control Valve (PICV): Each Acer 2 ULN module is factory-fitted with a Danfoss AB-QM Pressure Independent Control Valve on the water circuit. The PICV regulates flow through the plate heat exchanger by maintaining a constant differential pressure across itself, regardless of fluctuations in system pressure caused by other loads or pump modulation. This removes the need for separate commissioning set valves and ensures each module receives its design flow rate under all operating conditions. The unit does not include an internal circulating pump; flow is provided by the site hydraulic system.

Electronic Expansion Valve (EEV): Refrigerant flow is controlled by an Electronic Expansion Valve, which responds dynamically to suction superheat and system conditions. This provides more precise control than thermostatic expansion valves, maximises heat transfer efficiency across the full operating envelope, and contributes to compressor protection by preventing liquid return.

Ultra Low Noise: Acoustic performance is central to the Acer 2 ULN design, making it suitable for noise-sensitive sites such as residential developments, healthcare premises and urban plant rooms. The unit produces a sound power level of **66 dB(A)** and a sound pressure level of just **33 dB(A) at 10 m**, measured in accordance with **BS EN ISO 4871:2009**.

1.1.5 Serviceability and Maintenance Access

The Acer 2 ULN is engineered so that routine servicing and component replacement can be carried out quickly, safely and with minimal disruption. Components are arranged for front access, reducing the working space required around the unit and simplifying maintenance in plant rooms and confined external locations.

Front access throughout. All serviceable components are accessible from the front of the unit. This removes the need for all-round access and allows the unit to be sited closer to walls and adjacent plant than conventional designs.

Accessible fan deck. The fan deck is positioned at a working height of **1400 mm**, allowing fans to be inspected and serviced from a standing position without working platforms or step access.

Lift-off and hinged panels. Casing panels are fitted with handles and are either lift-off or hinged to maximise working space around the components. Panels can be removed or opened by one engineer.
Out-of-the-way water connections. The low-temperature hot water (LTHW) flow and return connections are routed clear of the access areas, so pipework does not obstruct servicing.

Split-height compressor housing. The compressor housing is split in height to improve access to the compressor and surrounding components.

Compressor on sliding mounts. The compressor is fitted on sliding mounts, allowing it to be drawn into the working area for inspection or removal rather than being worked on in a fixed, recessed position.

UK spares availability. Spare parts are held in UK stock, supporting rapid turnaround on replacement components and reducing system downtime.

* Declared in accordance with EN 14825. Average climate profile, W65/15. Figures do not include auxiliary energy or pump consumption unless stated.

2 Technical Specification

2.1 Standard & Low Noise Unit Technical Specifications

2.1.1 Minimum and Maximum kW output:

Mode	Min Compressor kW	Max Compressor kW
Heating (-10/+7)	79.1kW	123.7kW

Output figures are at the water temperatures 60/50 for heating. Actual output will vary with ambient air temperature, water flow/return temperatures, and capacity control mode selected. Refer to Clade performance program for full performance data.

Structure: Built on a heavy-duty FeZn 15/10 galvanized steel frame, the unit offers rigidity and longevity. The core chassis is designed for quick installation and stable placement, featuring integrated lifting eyes and forklift slots that streamline transport while ensuring reliable, vibration-resistant operation once sited.

Paneling: All external panels are fabricated from aluminium-zinc (AluZn)-coated steel, offering excellent corrosion resistance and a clean, uniform finish. Panels are secured to the chassis with stainless-steel fasteners and include integrated drip-edges and seal profiles to prevent water ingress. Access panels are hinged and lockable, providing full tool-free entry for service and maintenance. All panel joints are gasket-sealed to maintain IP24 protection

Air-Side Heat Exchanger: The air-side coil is a round-tube plate-fin (RTPF) arrangement, constructed with copper tubing and aluminium fins, engineered specifically for Propane (R290) operation. The coil geometry is optimised for low airside pressure drop and efficient defrost drainage. Hydrophilic fin coating is applied as standard to reduce ice adhesion and improve condensate shedding during defrost cycles.

Water-Side Heat Exchanger: The Acer 2 ULN is fitted with a stainless-steel brazed plate heat exchanger on the water side, serving the heating water circuit. The PHE is constructed from stainless steel plates for improved corrosion resistance and long service life.

Fans: Two EC (electronically commutated) axial fans provide air flow across the air-side coil. EC motor technology delivers stepless speed control, with the fan speed modulated continuously in response to real-time operating conditions including ambient temperature, refrigerant pressures, and compressor load. This results in reduced power consumption at part-load, lower operating noise compared to fixed-speed alternatives, and extended bearing life through avoidance of unnecessary high-speed operation.

Refrigeration circuit: The state-of-the-art refrigeration system is engineered for Carbon Dioxide (R744) operation, ensuring superior thermal performance and ultra-low GWP (Global Warming Potential).

2.2 Refrigerant Information

2.2.1 Characteristics of R744 refrigerant

The Acer 2 ULN heat pumps manufactured by Clade Engineering Systems are equipped with carbon dioxide (CO_2). Carbon dioxide is also known as R744 in the refrigeration industry. Carbon dioxide is classified as low toxicity and non-flammable therefore belongs to the A1/L1 safety category.

CO_2 is toxic at high concentrations, being an odorless gas and heavier than air it displaces oxygen and can cause serious harm to the body if the concentration of CO_2 is high. In addition, due to the high-pressure environment it has hazards which other refrigerants do not and must be handled appropriately.

All personnel involved with the specification, installation, operation, and maintenance of the unit must be fully qualified, competent and hold any certifications required to conduct the work involved.

The unit has been evacuated and pre-charged in the factory with the correct amount of refrigerant, no addition charge is required. The refrigerant charge can be found on the PED label.

If due to component failure or in the event of a leak, it is recommended that the system is stopped, and the charge or remaining charge is vented to atmosphere in a controlled manner. See system maintenance manual for access points and isolation procedures. Once the issue has been rectified the system would need to evacuated and re-charged with the correct amount of refrigerant as recorded on the PED label.

Model	Refrigerant (Kg)	Equivalent CO_2 tons (tCO_2e)
Acer 2 ULN	11..3	11.3

Physical characteristics of the R744 refrigerant	
Safety class (ISO)	A1 (Non-toxic, Non-flammable)
GWP ($kg.CO_2e$)	1
Low flammability limit (LFL) (Kg/m^3 @ 60°C)	Non-Flammable
Burning velocity (BV) (cm/s)	0 cm/s (Non-flammable)
Boiling point (°C)	-78.5 (Sublimation point at atmospheric pressure)
GWP (100 yr ITH)	1
ODP (Ozone Layer Depletion)	1
Self-ignition temperature (°C)	Non-Flammable

2.3 Dimensions

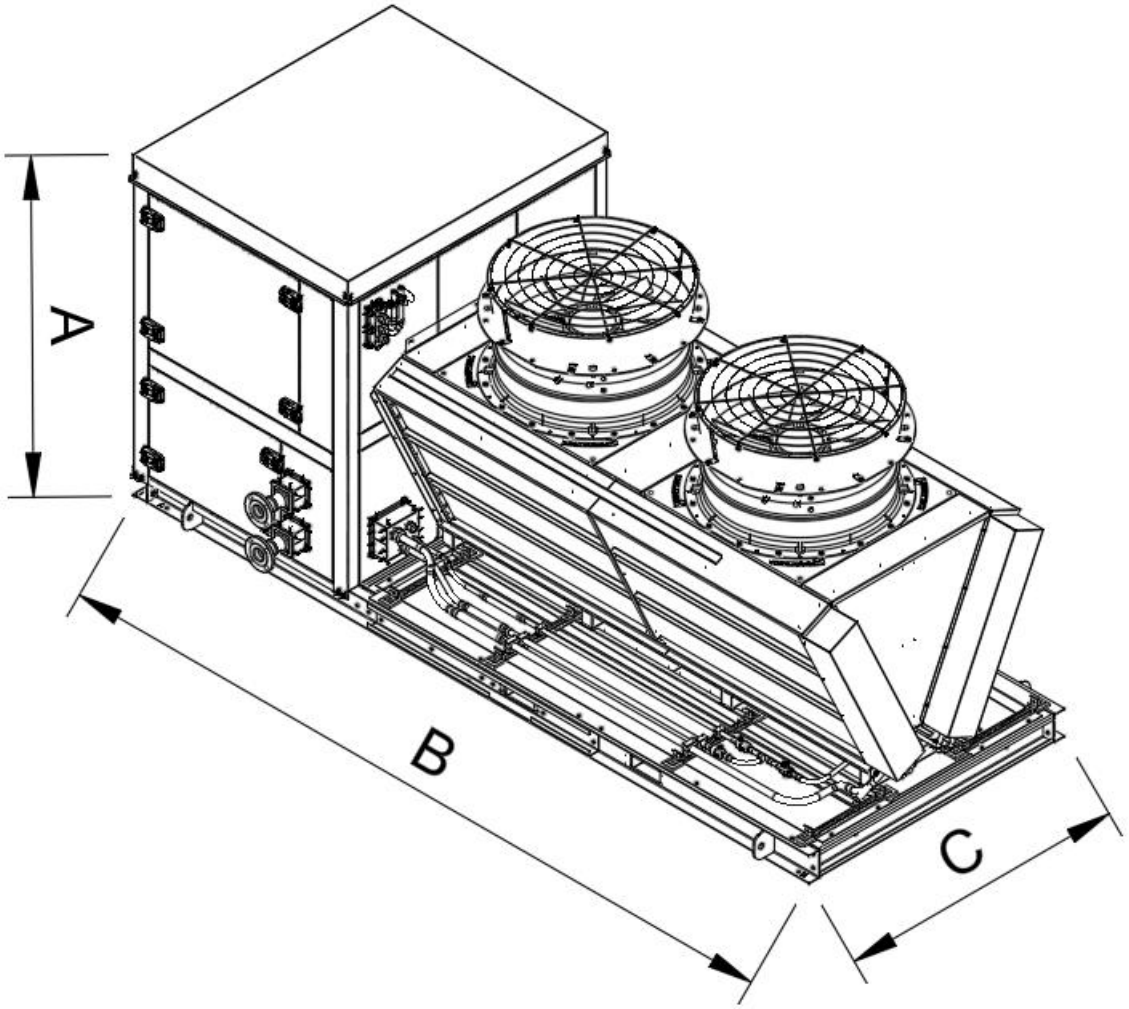

Unit	Height 'A' (mm)	Length 'B' (mm)	Depth 'C' (mm)	Shipping Weight (kg)
Acer 2 ULN	2000	4586	1720	3206

2.4 Service Connections

When selecting a location for the unit(s) consideration of the service connection positions is required. Each module has its own water service connections which are located on the right hand side panel. The electrical cabinet and termination point are located at the opposite side to the water connections.

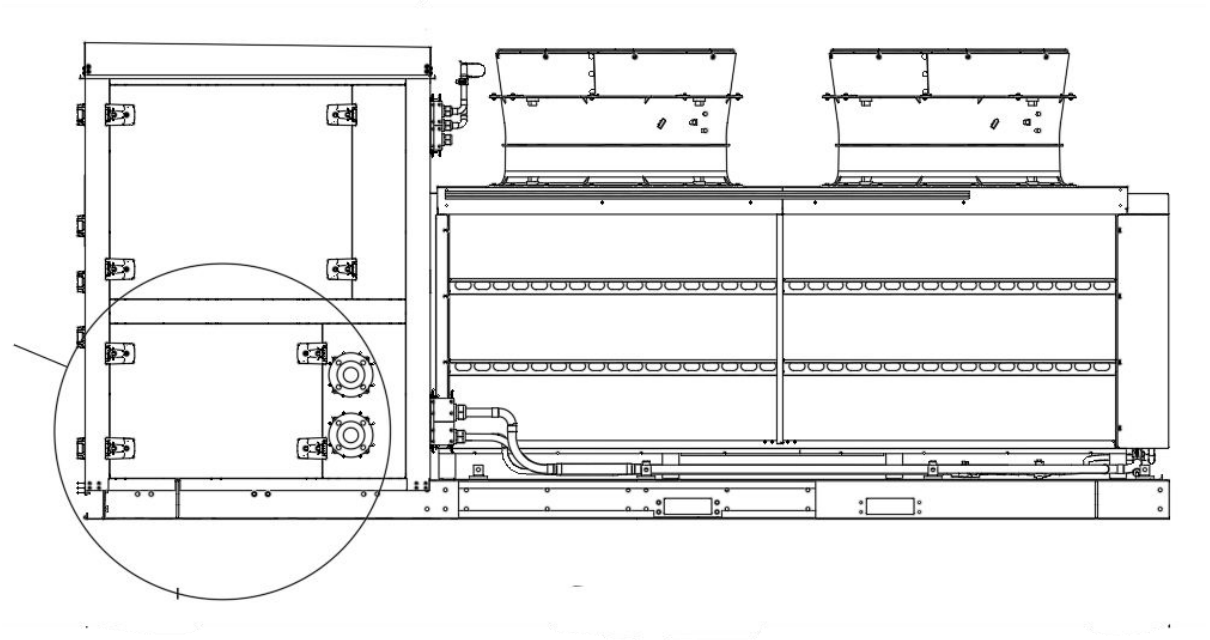

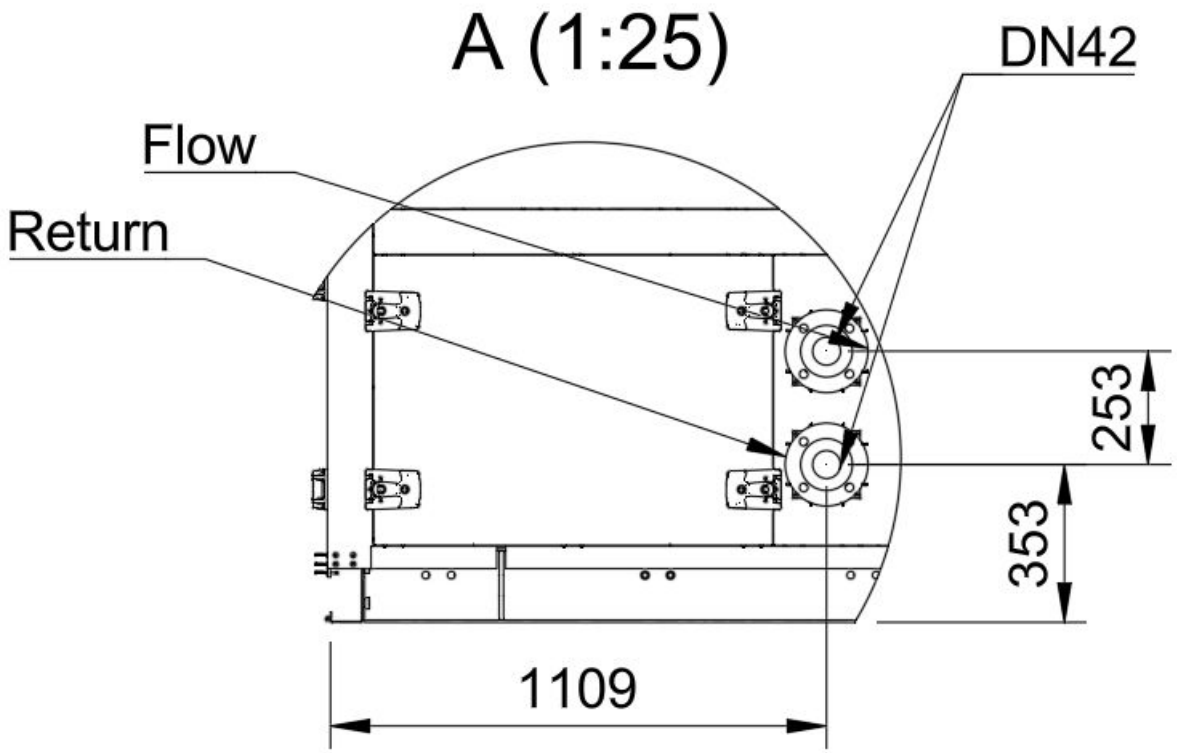

2.5 Installation Space Requirements

It is essential that the space requirements detailed in this section are strictly followed. Inadequate clearance will restrict airflow and compromise unit performance. Insufficient space will also obstruct access for routine maintenance, repairs, or replacement of components, which may result in warranty being void. Clearance here must also account for “bounce-back” space, which is a health and safety requirement to ensure safe working conditions during servicing. Wall height of the ASHP enclosure also impacts space requirements and can be seen in section 2.5.4

2.5.1 Single Unit Installation

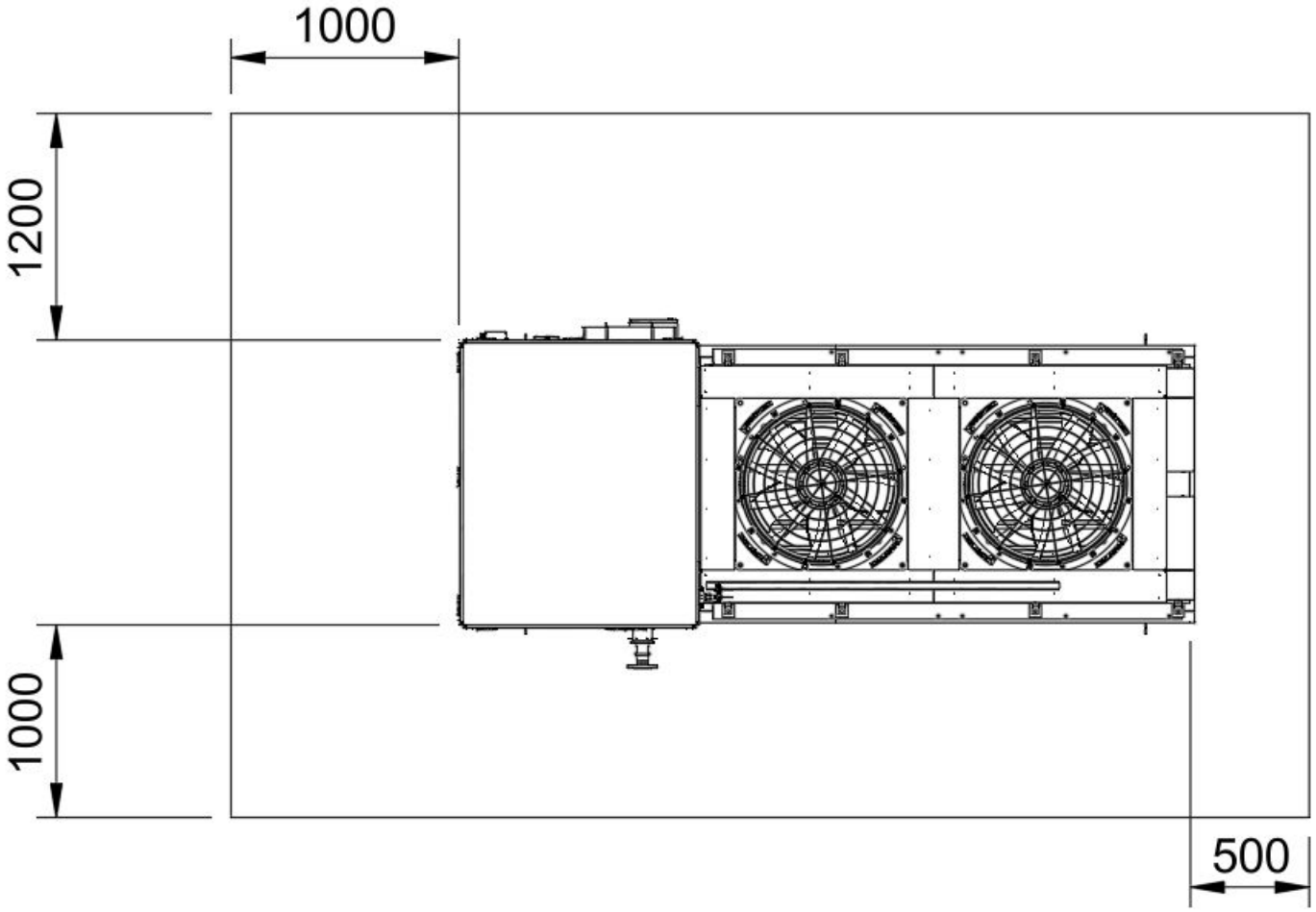

2.5.2 Clearance Above the Unit

For maximum airflow and therefore better performance, Clade requires at least 6m clearance above the unit.

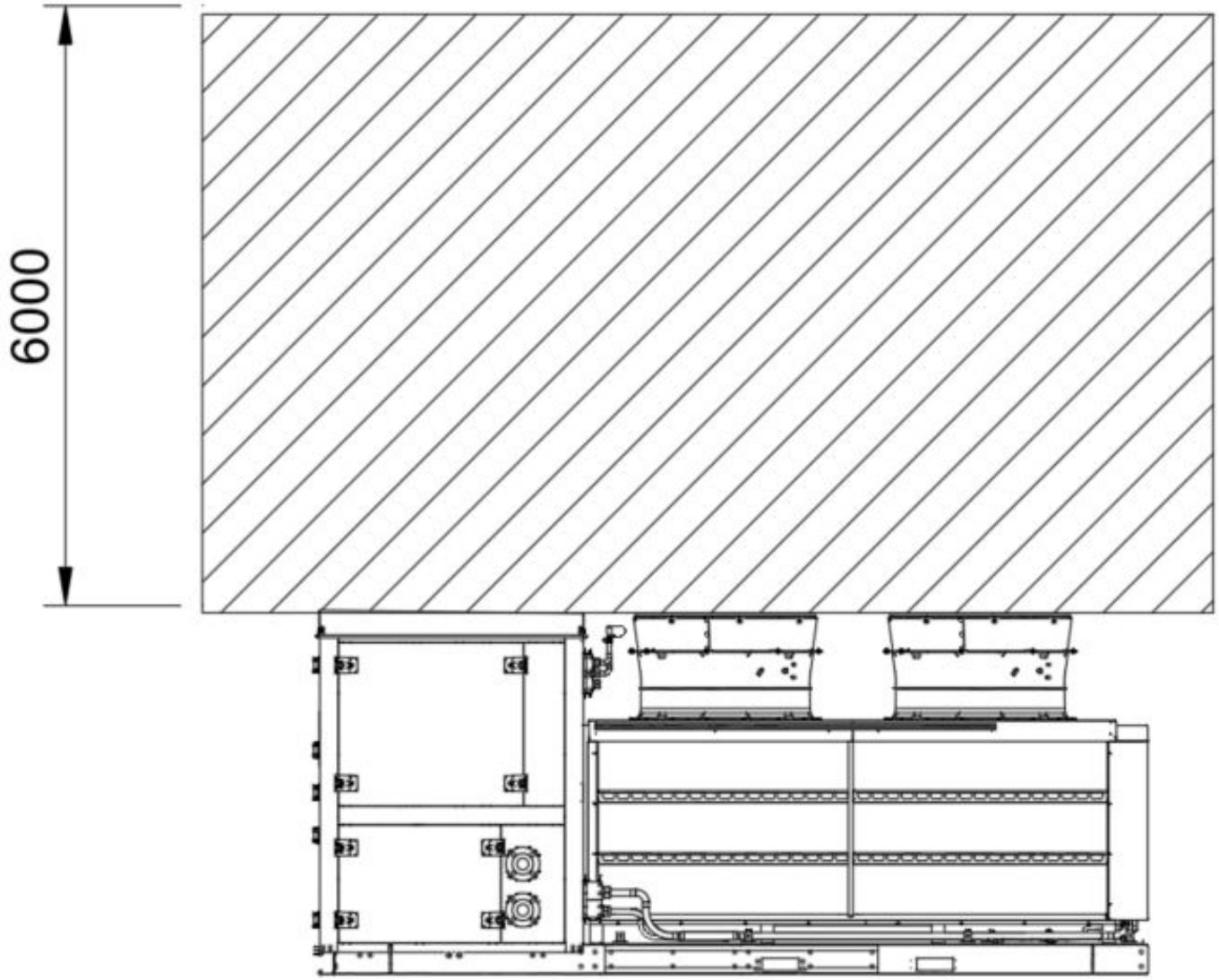

2.5.3 Multiple Unit Installation

When installing multiple units, make sure to take into consideration factors such as providing enough space for people to pass through, ample space between blocks of units, and sufficient space for airflow. There must be at least 2m between units if the pipework connections are facing each other to allow for access and the pipework.

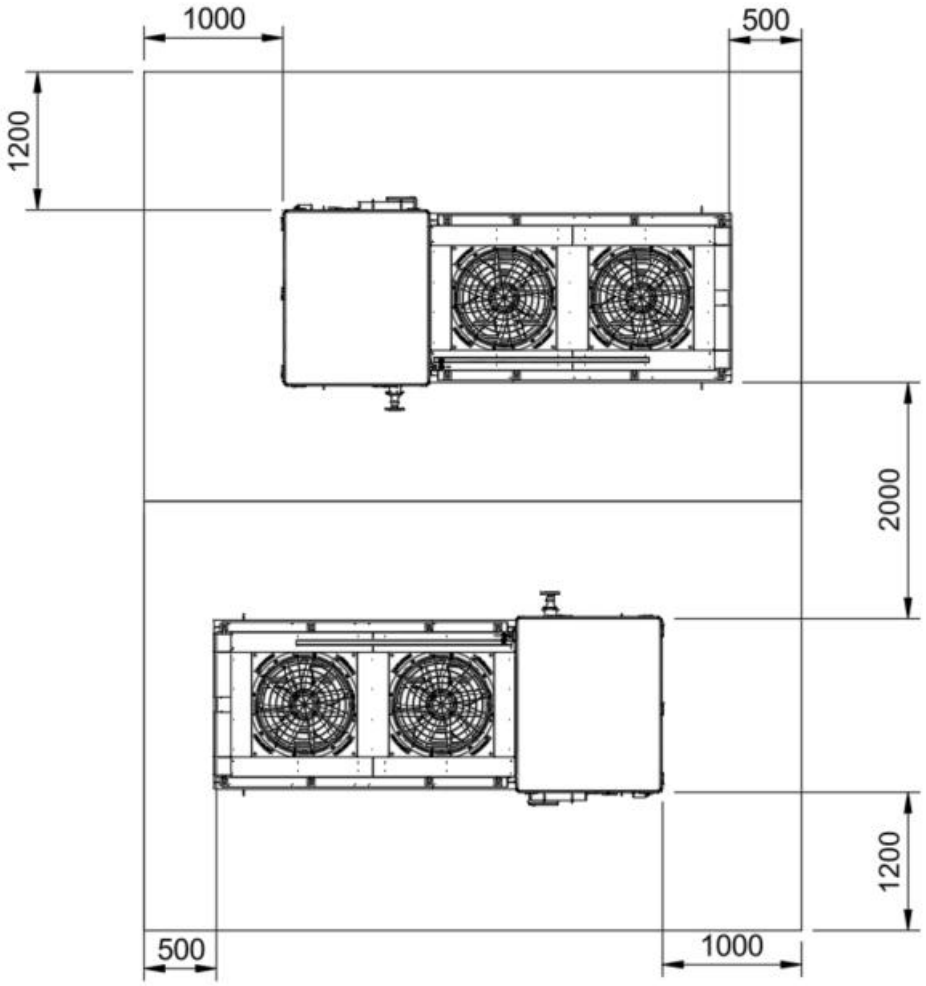

Where units are installed back-to-back, as shown below, a minimum clearance of 1200 mm must be maintained behind the electrical cabinet of any unit whose electrical side faces another unit. This also includes 1200mm to any pipework that may extrude from the opposite unit. This clearance is required to provide safe working space and allow for bounce-back.

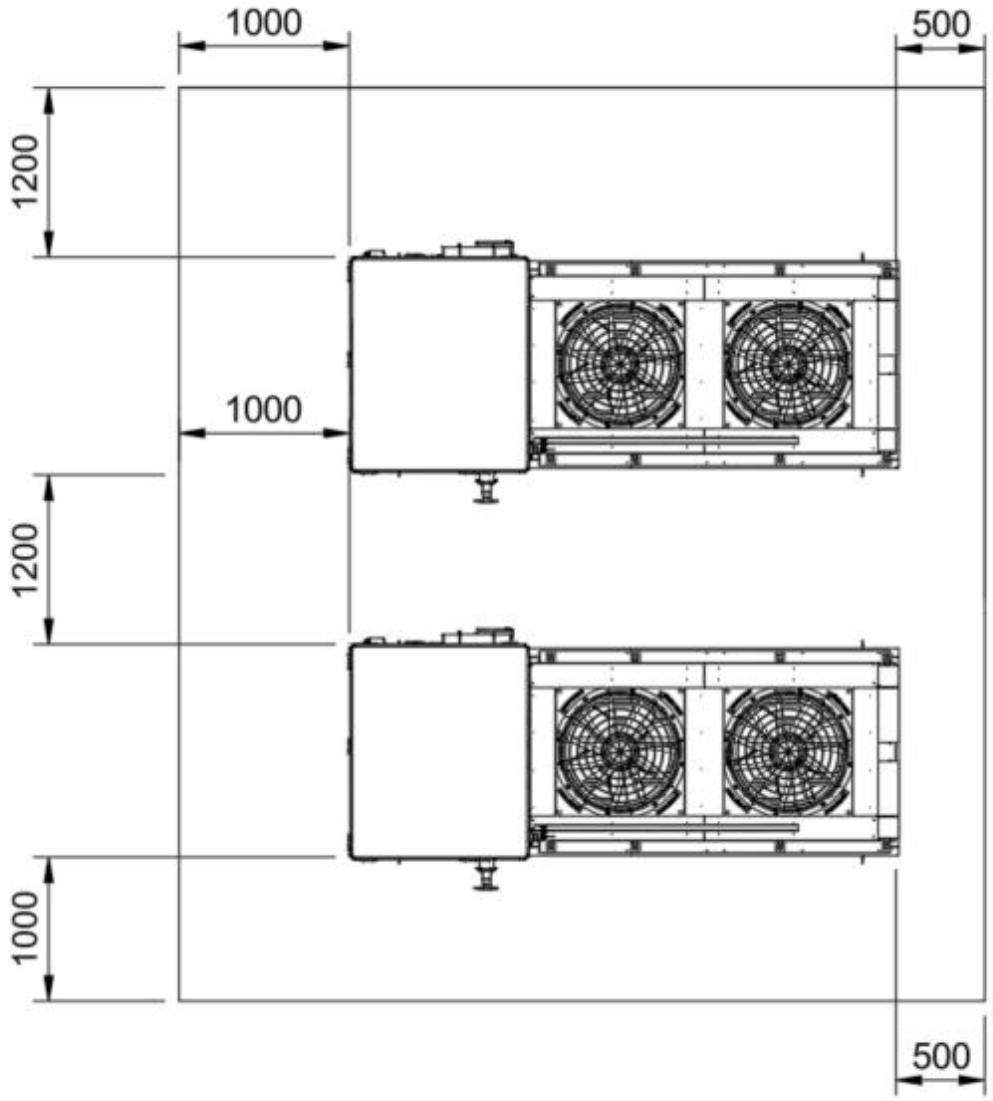

2.5.4 Wall Heights

(1)

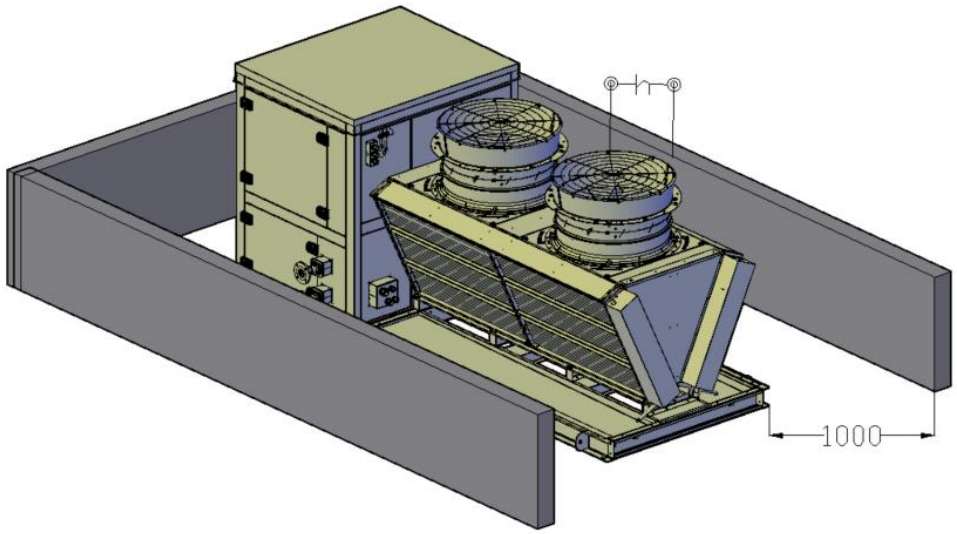

(2)

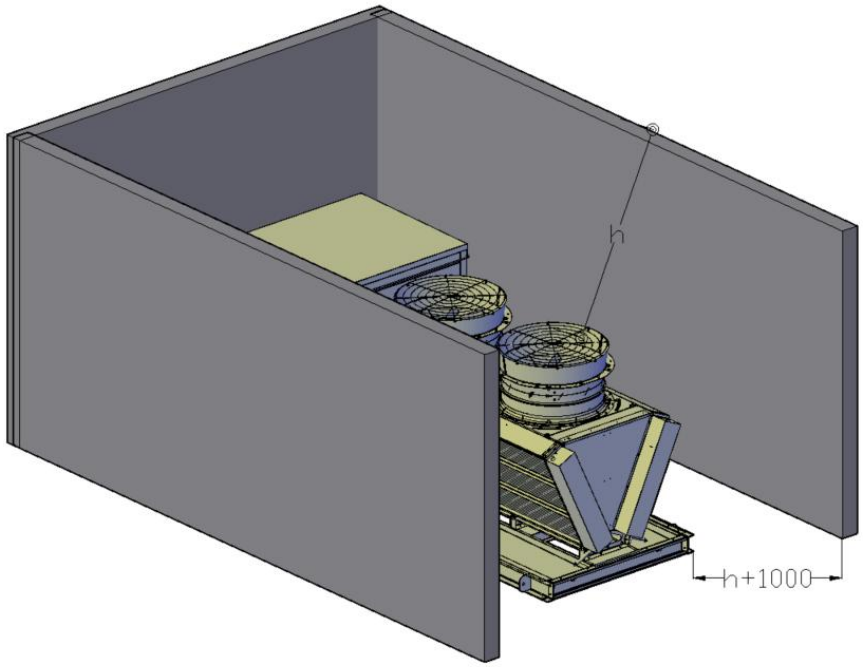

The required clearances around the unit are affected by the height of any adjacent walls or structures. The following scenarios must be used to determine the correct minimum clearances for the installation site.

(1) Walls around the unit do not exceed the unit height.
Where all adjacent walls or structures are equal to or lower than the height of the unit, a minimum clearance of 1000 mm must be maintained on all sides.

(2) One or more walls exceed the unit height
Where one or more adjacent walls or structures exceed the height of the unit, the standard 1000 mm clearance is no longer sufficient. The required clearance must be increased on the affected side(s) by the amount <h>, where <h> is the height by which the wall exceeds the top of the unit.

3 Technical Data

3.1 Performance Data

Acer 2 ULN		
Heating performance data to EN14511 (A7/W70) 40K TD		
Rated heating output	kW	123.7
Coefficient of Performance (COP)		3.05
Heating performance data to EN14511 (A-5/W70) 40K TD		
Rated heating output	kW	94.2
Coefficient of Performance (COP)		2.42

For more detailed and extensive performance data please see the Clade ASHP Performance Program

3.2 Construction Table

Acer 2 ULN		
REFRIGERATION SIDE		
Compressor Type	-	Reciprocating
Compressor Qty	Pcs.	1
Refrigerant	-	CO_2 (R744)
Refrigerant Circuits	Pcs.	1
Variable speed drive (VSD)	Pcs.	1
Refrigerant charge	kg	11.3
Max Operating Pressure — LP Side	bar	16.2
Max Operating Pressure — HP Side	bar	40
Evaporators Type	-	Fin/Tube Air Coil
Fin Material (Air Coil)	-	AL/MG
Defrost Type	-	Hot Gas
Defrost medium	-	R744
DIMENSIONS & NOISE		
Colour	-	RAL7016 Anthracite
Height		2000
Length		4586
Depth		1720
Unit Weight (Shipped)	kg	3206
Sound Power Level Lw(A)	dB	65
ACCESS		
Minimum free space right	mm	1200
Minimum free space right	mm	1000
Minimum free space front	mm	500
Minimum free space back	mm	1000
Minimum free space above	mm	6000
WATER SIDE		
Type of internal exchangers	-	Stainless steel plate
No. of Plate Heat Exchangers	Pcs.	1
Exchanger Water Volume	L	14.3
Connections waterside inlet/outlet	mm (OD)	42
Control Methodology	-	PICV (Danfoss AB-QM)
Total Waterside Pressure Drop (Max)	kPa	45.3
Max System Water Flow Rate (W70/30)	l/s	0.74
Min Water Flow Rate (W70/30)	l/s	0.35
FANS SECTION		
Fans type	-	Axial
N° fans	Pcs.	2
Total System Airflow (Max)	m^3/s	5.6

Evaporator Airside Pressure Drop	Pa	15
Fan Input Power (Max)	kW	0.3
Fan regulation	-	0-10V
ELECTRICAL DATA		
Electrical supply	-	3~ 400V 50 HZ
Total Absorbed Power (Max)	kW	42.2
Total Current per phase (FLC)	A	67.0
Max Operating Current (MOC)	A	86.6
Max Start-Up Current	A	33.6
Max Inrush Current	A	259.8
Total kVA (Max)	51.4	46.4
Mains Isolator	A	125
Communication protocol	-	BACNET over IP (optional extra)
IP-Class	-	IP24

3.4 Noise

The Acer 2 ULN incorporates noise attenuation as a core design feature.

3.4.1 Vibration Isolation

- **Flexible connections** must be fitted on all water connections at the unit on both flow and return. Braided stainless steel flexible connectors are recommended.
- **Anti-vibration measures** should be fitted between the unit base frame and the supporting structure ,particularly on rooftop installations or where the unit is mounted on a lightweight steel or concrete frame
- **Pipework supports** must be independent of the unit housing, do not fix pipe supports, brackets, cable trays, or any other external element directly to the unit panels or frame. Doing so creates a rigid acoustic bridge that will transmit compressor and fan vibration directly into the building structure, negating any isolation measures elsewhere in the system
- **Inertia bases** should be considered on sensitive installations such as directly above occupied spaces

3.4.2 Installation Acoustic Corrections

It should also be noted that our noise test data is based on a hemispherical measurement approach, which assumes free-field conditions without additional reflective surfaces. In cases where equipment is suspended, like the proposed frame, or installed in proximity to reflective structures, the acoustic environment is altered, and corrections must be applied. This includes consideration of increased tonality penalties, particularly where additional surfaces amplify low-frequency emissions.

3.4.3 Noise Calculation

Noise details are detailed below for the Rowan heat pump range. Data includes units with optional silencers installed as well as a low noise housing option with silencers for comparison. Reported In accordance with BS EN ISO 4871: 2009 and Measured in Accordance with BS EN ISO 9614 - Part 1: 2009

Acer 2 ULN Range	Heating
Sound Power Level, $L_{W(A)}$ (dB) (1)(2)	66
Sound Pressure Level at 10m (dB) (3)	34
Uncertainty (dB)	4

Unit	Octave Band Centre Frequency (Hz)									
	63	125	250	500	1000	2000	4000	8000	Lin	(A)
Acer 2 ULN Lw (dB)	66	66	65	63	60	57	52	50	72	66

(1) The sum of a measured noise emission value and its associated uncertainty represents an upper boundary of the range of values which is likely to occur in measurements
(2) The sound levels refer to a unit operating under conditions that guarantee a thermal capacity equal to that declared at an outdoor air temperature of 7°C DB (6°C WB), according to EN 14825:2022
(3) Assumed 10m parallelpiped sound propagation

3.5 Glycol use correction factors

% propylene glycol by weight		0%	10%	20%	30%
Freezing point	°C	0	-3	-8	-14
Correction factor for flow rate	Nr	1	1.020	1.045	1.074
Correction factor for system pressure drop	Nr	1	1.019	1.042	1.071
Correction factor for unit heating capacity	Nr	1	1.000	1.000	1.001

The correction factors shown refer to water and propylene glycol mixes used to prevent the formation of frost on the exchangers in the water circuit during inactivity in winter. Glycol has no impact on kW output of the Acer 2 ULN units, instead the unit modulates flow rate.

3.6 Operating Ranges

3.6.1 Heating

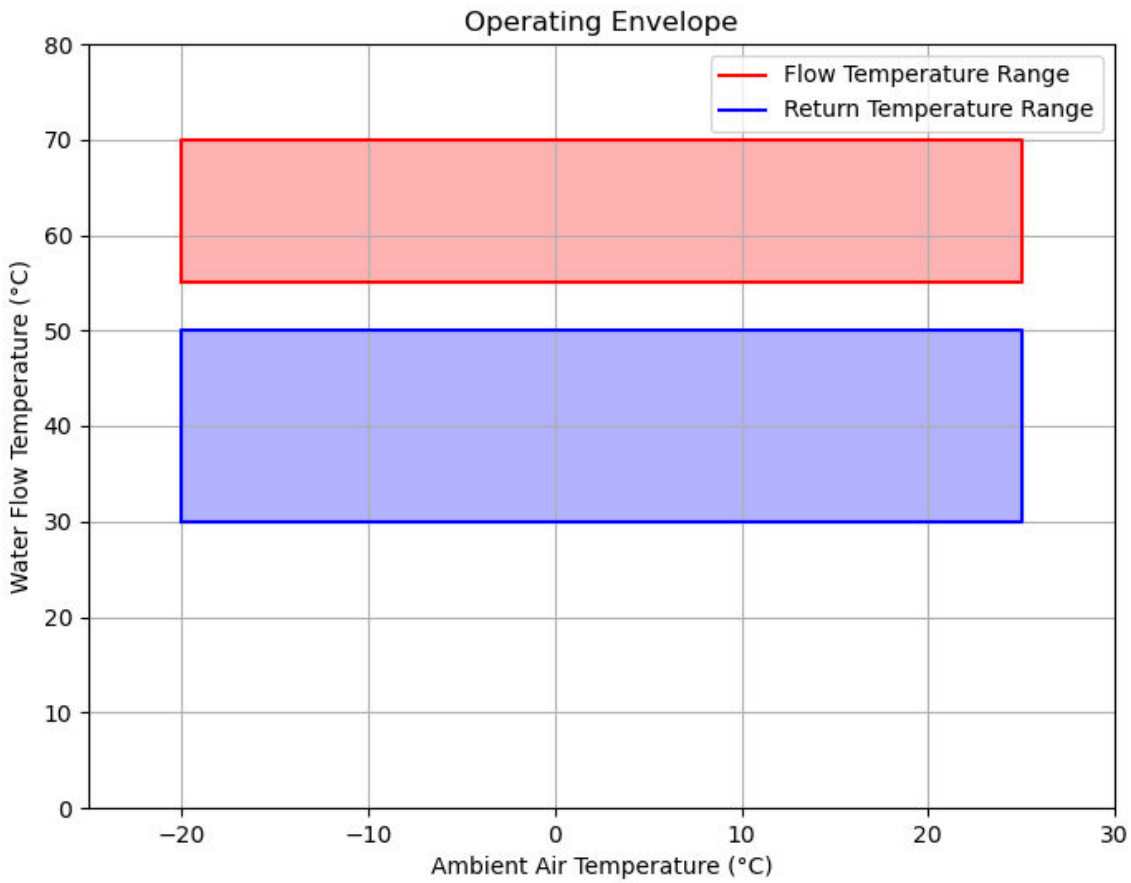

The Acer is a CO_2 heat pump. Its performance is governed primarily by **return water temperature**, not flow temperature. Published capacities and COPs are predicated on the system returning water at or below the design return point, with a maximum permissible return of **50°C**.

Selecting narrow flow/return spreads such as 70/60 or 65/55 is not supported. These selections place return temperature at or above the unit's hard return ceiling and will cause the unit to fault on high return.

As CO_2 is a transcritical refrigerant, design return temperature should be no higher than 30°C wherever possible to achieve optimal efficiencies. The minimum supported design ΔT depends on the design return:

Design Return	Minimum Design ΔT	Example Selection
≤30°C	25K	55/30, 60/30, 70/30
30-40°C	25K	60/35, 65/40
40-50°C	20K	70/50 (limit case)

Returns above 50°C are not permitted under any circumstance and will result in a high return water fault.

3.7 Pressure Independent Control Valves

All Acer 2 ULN units are factory-fitted with Danfoss AB-QM NovoCon Pressure Independent Control Valves on the water circuits. The Acer 2 ULN is fitted with a DN50 on the heating water circuit and does not include an internal circulating pump. Instead, the water circulating pump for the system must be sized, sourced, and installed by a third party; Clade does not supply a circulating pump as part of the standard heat pump offering.

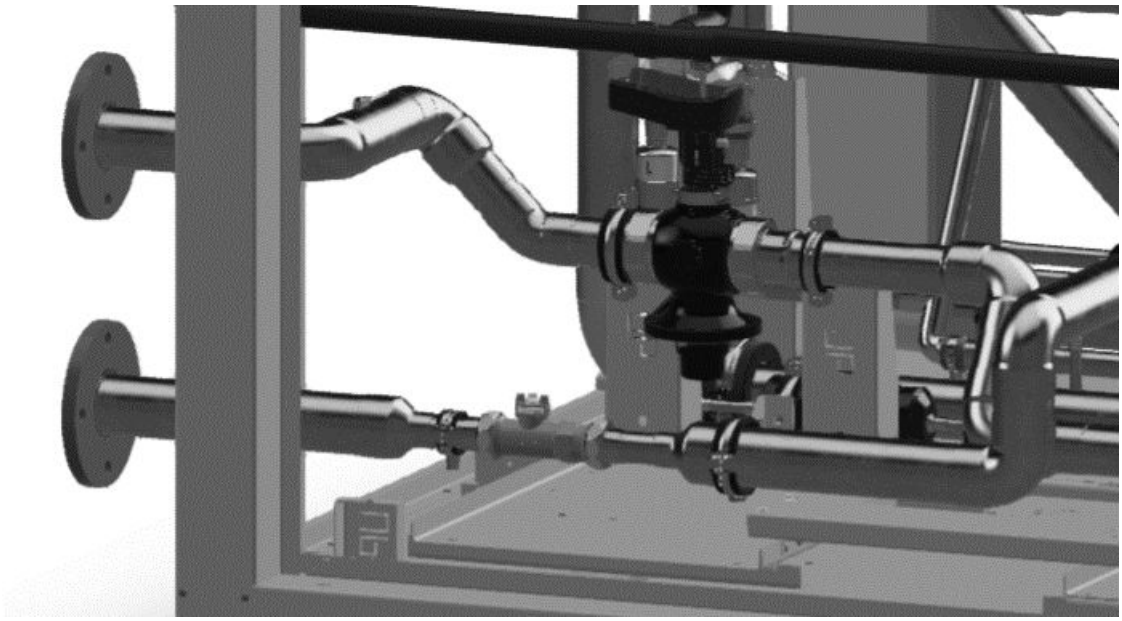

The PICVs are engineered to regulate the flow through the plate heat exchanger by varying the pressure drop across the valve independently of the inlet pressure. This design ensures that the system-side flow balance remains unaffected. Moreover, the design flow rate is directly set in the actuator in built software, eliminating the need for manual valve presetting since the actuator automatically manages the valve's operating envelope.

3.7.1 Primary Pump Control

The system circulating pump must be configured to operate in **constant pressure (constant differential pressure) mode**. Variable pressure, constant flow or proportional pressure pump control modes must not be used with this system.

3.8 Internal Exchanger Pressure Drops and Admissible Water Flow Rates

3.8.1 Heating

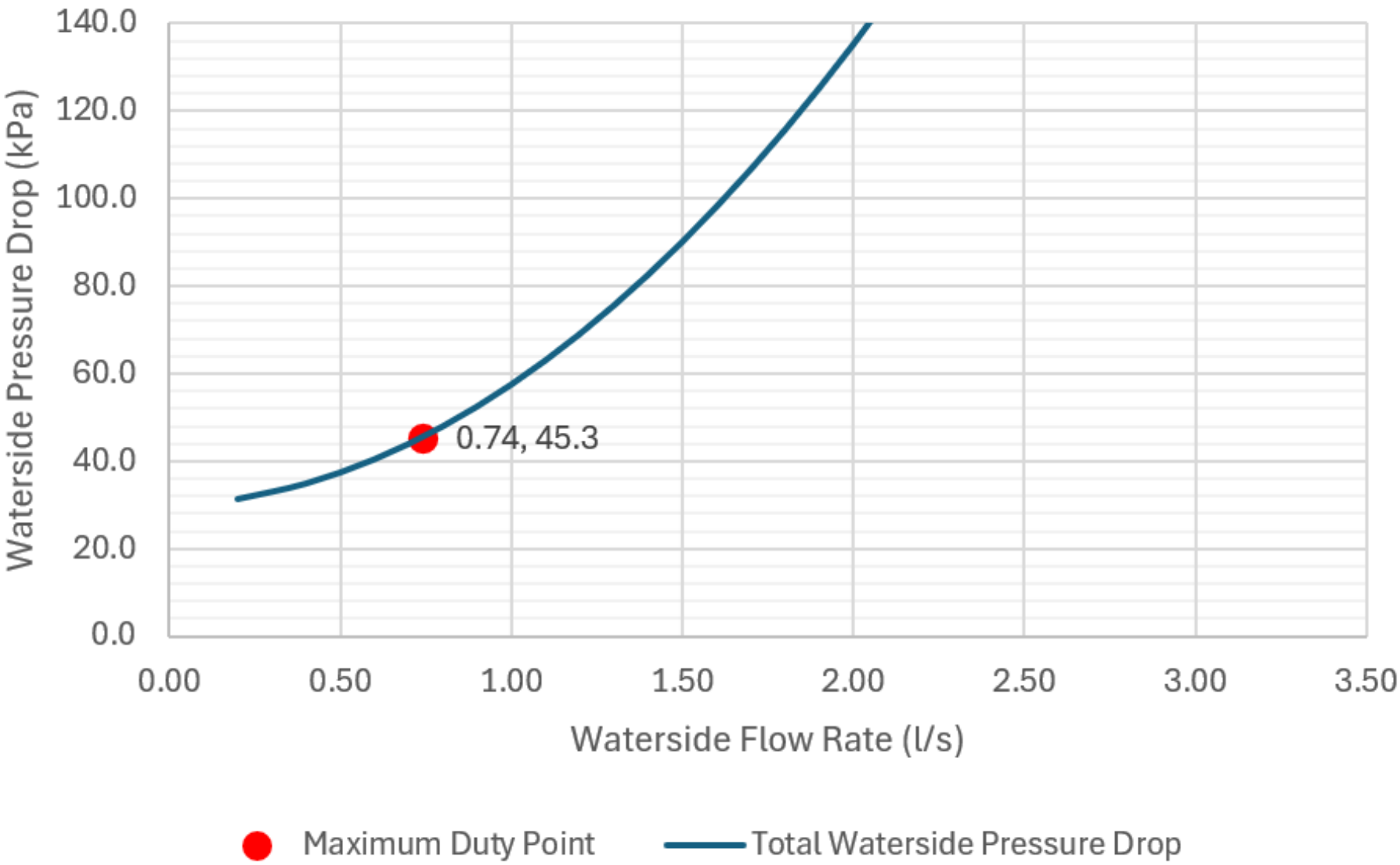

3.9 Performance data

The performance data presented here reflects testing under the controlled parameters outlined in EN 14511 and is intended for ideal conditions only. Actual performance may differ due to variables such as installation specifics, operational settings, and climatic variations. Customers should verify requirements for each individual application, recognizing that local conditions in the United Kingdom can markedly influence real-world results.

3.9.1 Acer 2 ULN

Model name	Water Temp (°C)	-10°C External			-5°C External			0°C External			5°C External			7°C External			10°C External			15°C External		
		QH (kW)	PI (kW)	COP	QH (kW)	PI (kW)	COP	QH (kW)	PI (kW)	COP	QH (kW)	PI (kW)	COP	QH (kW)	PI (kW)	COP	QH (kW)	PI (kW)	COP	QH (kW)	PI (kW)	COP
ACER 2 ULN	70/35	74.4	37.2	2.0	88.5	39.7	2.2	99.2	41.2	2.4	112.1	42.7	2.6	116.2	43.1	2.7	116.2	41.4	2.8	116.2	38.5	3.0
	65/35	74.4	37.2	2.0	88.5	39.7	2.2	99.2	41.2	2.4	112.1	42.7	2.6	116.2	43.1	2.7	116.2	41.4	2.8	116.2	38.5	3.0
	60/35	74.4	37.2	2.0	88.5	39.7	2.2	99.2	41.2	2.4	112.1	42.7	2.6	116.2	43.1	2.7	116.2	41.4	2.8	116.2	38.5	3.0
	70/30	79.1	36.4	2.2	94.2	38.9	2.4	105.6	40.3	2.6	119.2	41.8	2.8	123.7	42.2	2.9	123.7	40.5	3.1	123.7	37.7	3.3
	65/30	79.1	36.4	2.2	94.2	38.9	2.4	105.6	40.3	2.6	119.2	41.8	2.8	123.7	42.2	2.9	123.7	40.5	3.1	123.7	37.7	3.3
	70/25	83.9	37.2	2.3	99.8	39.7	2.5	111.9	41.2	2.7	126.4	42.7	3.0	131.1	43.1	3.0	131.1	41.4	3.2	131.1	38.5	3.4
	65/20	88.6	36.4	2.4	105.5	38.9	2.7	118.2	40.3	2.9	133.5	41.8	3.2	138.5	42.2	3.3	138.5	40.5	3.4	138.5	37.7	3.7
	65/17	90.2	36.4	2.5	107.4	38.9	2.8	120.3	40.3	3.0	135.9	41.8	3.2	141.0	42.2	3.3	141.0	40.5	3.5	141.0	37.7	3.7
	65/15	91.0	36.4	2.5	108.3	38.9	2.8	121.4	40.3	3.0	137.1	41.8	3.3	142.2	42.2	3.4	142.2	40.5	3.5	142.2	37.7	3.8
	65/09	93.4	36.4	2.6	111.1	38.9	2.9	124.6	40.3	3.1	140.7	41.8	3.4	145.9	42.2	3.5	145.9	40.5	3.6	145.9	37.7	3.9
	70/40	69.6	41.1	1.7	82.9	43.8	1.9	92.9	45.5	2.0	104.9	47.2	2.2	108.8	47.6	2.3	108.8	45.7	2.4	108.8	42.5	2.6
	70/45	49.9	44.9	1.1	59.3	47.9	1.2	66.5	49.7	1.3	75.1	51.6	1.5	77.9	52.1	1.5	77.9	50.0	1.6	77.9	46.5	1.7

4 Electrical Installation

4.1 Electrical data

4.1.1 Supply voltage 400/3/50+N

Acer 2 ULN		Heating
F.L.A. - Full load current at max admissible conditions (per phase)		
F.L.A. - Total	A	67.0
M.O.C. - Max Operating Current		
M.O.C. - Total	A	86.6
F.L.I. - Full load power input at max admissible conditions		
F.L.I. - Total	kW	42.4
M.I.C. - Maximum inrush current		
M.I.C. - Total	A	259.8

Power supply 400/3/50 (+ NEUTRAL) +/- 10%. Maximum Phase Unbalance: 2%.

For non-standard voltage please contact Clade technical office

4.2 Mains Supply Installation

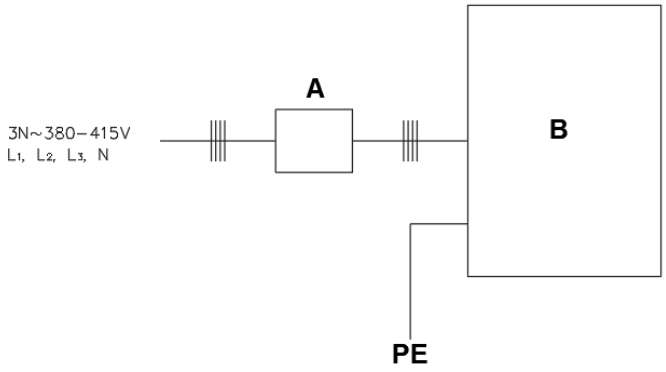

A: Upstream Protection (by others)
B: ASHP

4.2.1 Power Supply Details

SN + LN	External power supply		
	Power supply	Switch manual	Local Protection
Acer 2 ULN	380-415V 3N~ 50Hz	125A (pre mounted)	125A

Each Acer 2 ULN ASHP requires a dedicated 400/3/50 +N power supply with tolerance ±10% and a maximum allowable phase imbalance of 2%.

- Each unit is supplied with its own local isolator and MCB 10KA C Curve 3 Pole protection device protection device.
- Upstream protection must be provided by the installer and correctly sized to suit the unit's full load and inrush currents (see Section 4.1).
- Cable sizing must consider local climatic conditions, service routes, ambient temperature, installation method, and grouping factors.
- The electrical installation must comply with BS 7671:2018 (IET Wiring Regulations) or the equivalent national wiring regulations in the country of installation.

⚠ **CAUTION**

- Always use correctly rated fuses or breakers. Incorrectly sized protective devices may result in malfunction, overheating, or fire.
- Ensure cables are adequately supported and that no external mechanical stress is imparted on terminations. Loose or stressed connections can cause overheating and arcing.

4.2.2 Terminal Block Arrangement

Each Acer 2 ULN heat pump is fitted with glanding for the incoming mains supply. The termination entry point is identical across the entire Acer 2 ULN range and is positioned on the side of the unit opposite to the water connections (refer to the illustration below).

- Route supply conductors through the bottom of the factory-installed termination box which is indicated in the figure below.
- Size all supply cables in accordance with the full load current (FLA) of the unit (see Electrical Data section).
- Tighten all terminals to the torque values specified on the terminal-strip label.
- There is then cable gland directly above the termination box to route cable into the unit.

⚠ **CAUTION**

Earth tabs must be reconnected prior to refitting access panels

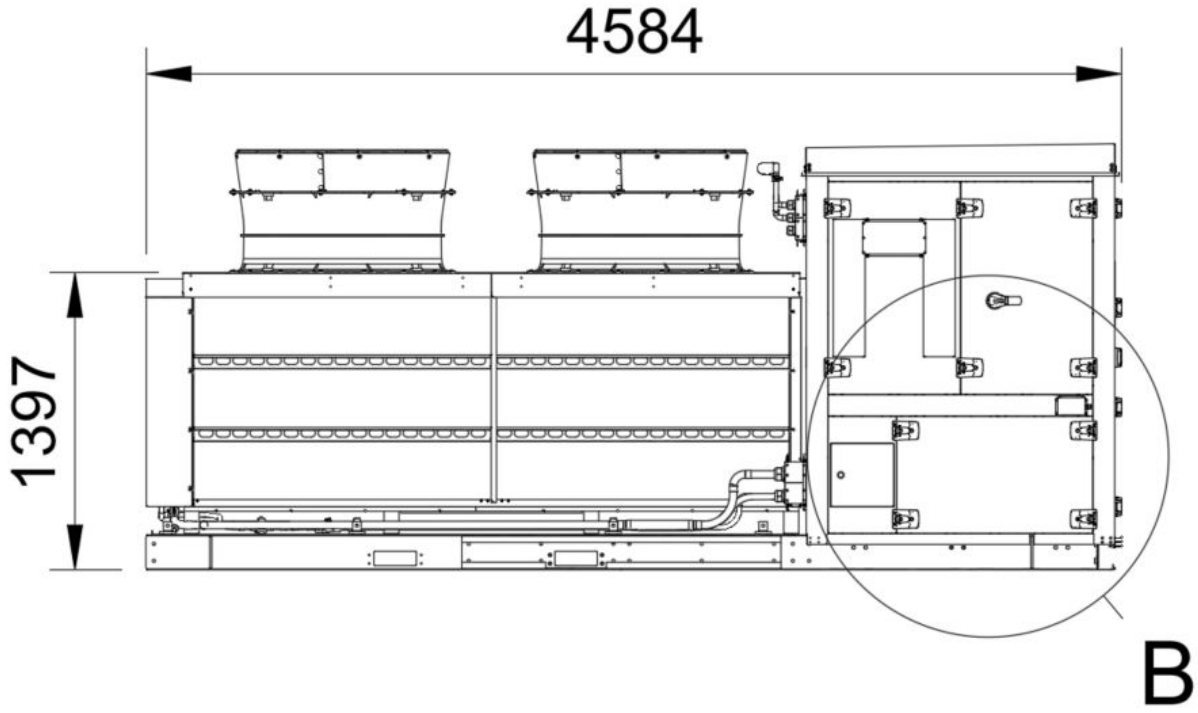
4584
1397
B

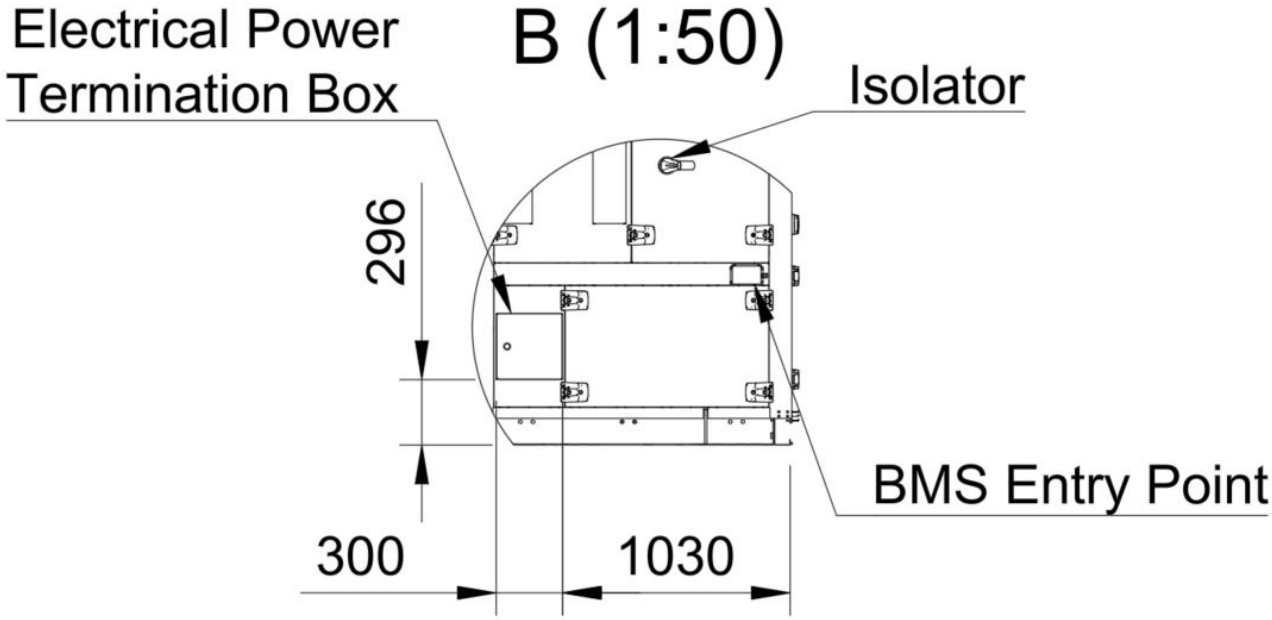
Electrical Power
Termination Box
B (1:50)
Isolator
296
BMS Entry Point
300
1030

4.2.3 Maximum Cable Sizes

Maximum copper conductor cross-sections for the mains supply terminations are as follows. These are the maximum sizes the terminal blocks can accept – actual cable size must be determined by the installing electrician in accordance with BS 7671:2018.

Model	Maximum Cu cable cross-section (mm²)
Acer 2 ULN	50

⚠ **WARNING**

Be sure to use specified wires and ensure no external force is imparted to terminal connections. Loose connections may cause overheating and fire.

⚠ **CAUTION**

Only use properly rated breakers and fuses. Using a protection device of the wrong size may cause the unit to malfunction or set fire.

4.2.4 Control Connections

The following control cable specifications are required:

Remote controller cable size	0.3 - 1mm² Shielded cable recommended to minimise electrical interference.
Cable between units and controllers	Cat 5/6 data cable

5 Hydraulics

5.1 Piping Connections

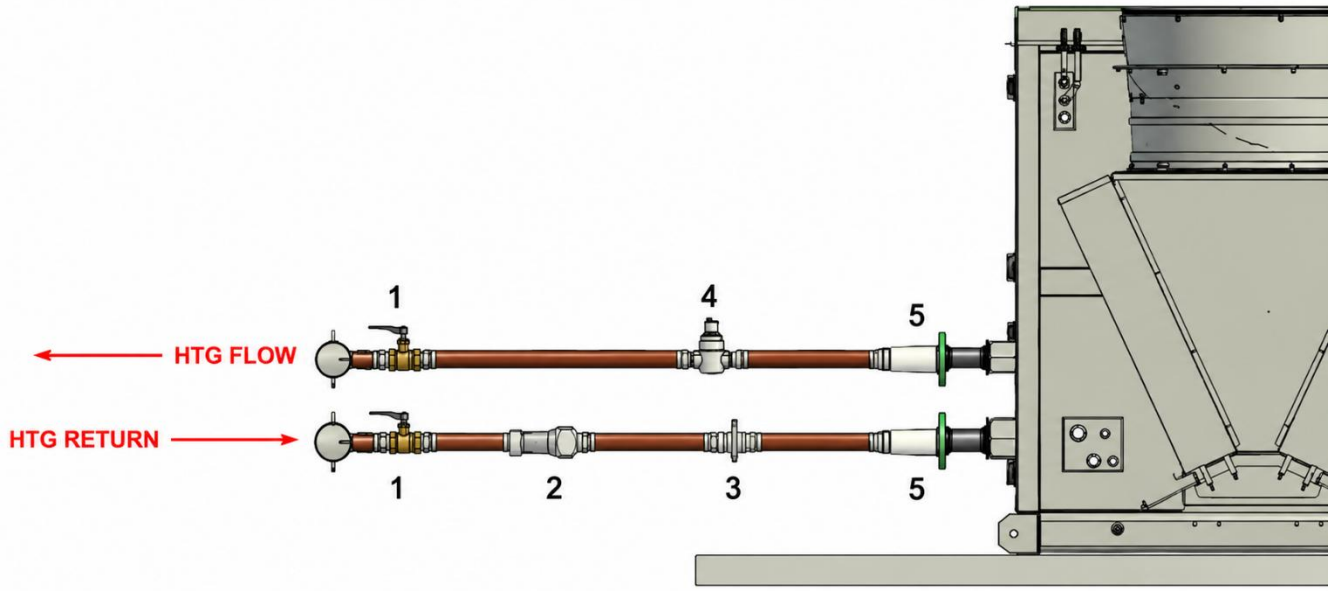

Each UNIT must be fitted with the above ancillaries before tying into the main header. The abbreviations on the diagram can been seen below.

1	Isolation Valve	Allow for isolation for maintenance
2	Strainer	Prevents addition of debris into the unit
3	Orifice Plate	Flow rate measurement and verification
4	Auto Air Vent	Required to release air accumulating within system
5	Flexible Connection	Mitigates noise/vibration through pipework

Note – Water-side pressure relief : This connection detail does not include a water-side safety (pressure relief) valve. The provision, sizing, setting and correct location of pressure relief for the closed water circuit is the responsibility of the system designer and installing contractor.

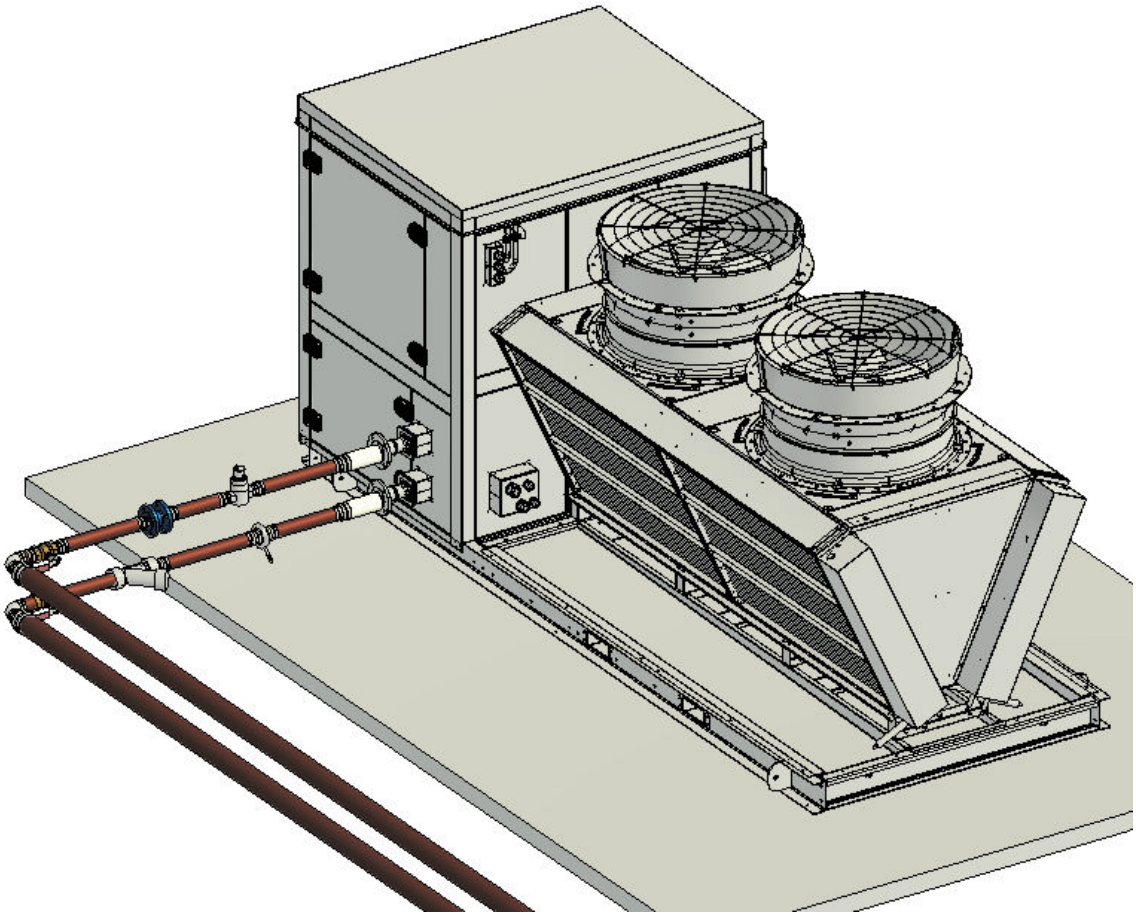

5.1.1 Pipe Connection Sizes

Connection Type	Acer 2 ULN
Heating Flow	65mm Bimetallic Flange
Heating Return	65mm Bimetallic Flange

5.1.2 Freezing Protection

In areas prone to freezing, fit each exterior pipe with a freeze-prevention heater to stop ice from forming. After installing the heater, verify that the pipe joints on the heat pump's inlet and outlet remain at roughly +25°C–even if the outdoor temperature drops to -25°C–to ensure the joints don't fall below 0°C. For different types of pipe materials, consider a self-regulating heater or an equivalent solution that prevents both freezing and overheating.

5.2 Defrost

The ASHPs come with their own hot gas frost protection cycle. This shuts off the internal LTHW flow through the ASHPs and directs hot gas through the evaporation coils removing any ice build-up. If required, the buffer should be adequately sized to maintain heating service to the building. See section 5.5. 2.

5.2.1 Minimum Free Flowing Water Content

In order to protect the integral components of the unit, the primary system requires a minimum water content. This volume ensures the compressor cannot exceed six starts per hour when the unit is running at minimum turndown.

Minimum water volume per Acer 2 ULN unit (liters)	Heating
	250

Please Note: This is the minimum volume to protect the compressor and extend the lifespan of the units. If the units are to be controlled on capacity control, there will need to be more volume in the vessel to allow for stratification control.

5.2.2 Optimal Buffer Sizing

While the minimum buffer sizes ensure basic heat pump protection and operational stability, optimally sized buffers enhance system efficiency, reduce cycling frequency, and improve overall performance. Buffer vessel sizing ultimately rests with the system designer however, the following recommendations provide guidance on selecting the ideal buffer capacity to maximise energy efficiency and maintain consistent heating output.

Defrost Cycle Management: Air source heat pumps undergo periodic defrost cycles, during which the heat pump uses hot gas to clear ice from the evaporator. During this period, the buffer vessel provides stored thermal energy to maintain heating supply to the building. The vessel must be sized to cover the full heat load during defrost to prevent temperature drops. Clade recommends a minimum of 15 minutes storage to cover this.

Peak Load Consideration: The buffer volume should accommodate the total peak kWh heating demand of the building while accounting for variations in heat pump output due to defrost.

Building Load Profiles: CIBSE Guide A shows how to perform detailed analysis of building heating load profiles. Factors such as occupancy patterns, thermal mass, and intermittent heating requirements should be evaluated to determine the total time the peak load is required and the necessary storage capacity.

5.2.3 Buffer Design Considerations

To ensure optimal performance and efficiency in heat pump systems, proper buffer vessel design is crucial. A well-designed buffer enhances stratification, maximises usable volume, and provides precise control for charging and discharging cycles. Key aspects of an effective buffer design include:

- Height-to-Width Ratio: A buffer vessel should have a minimum height-to-width ratio of 2.5:1. This geometry promotes better thermal stratification by reducing the potential for mixing between layers, ensuring a stable temperature gradient within the vessel.

- Sparge Pipes: Increases the useable volume of the vessel.

- External Combined Headers: One in one out header based on CIBSE Cp1. Prevents mixing and maintains stratification and is sized to achieve less than 0.3 m/s velocity into the vessel. The header helps maintain stable pressure conditions across both the primary and secondary circuits. This is essential for variable flow systems and avoids issues with fluctuating demand.

- Temperature sensors: Five temperature sensors distributed vertically within the buffer need to be distributed properly for precise monitoring and adjustments to maintain optimal conditions. When there are multiple buffers, these need to be spread across the vessels evenly. Four additional sensors on the primary and secondary flow and return pipework from the buffer.

5.3 System Pressure

All mechanical/LTHW systems require pressure relief equipment to maintain the safe working condition of the system. This will be designed and specified by the system designer/installer.

5.3.1 Safety Valves

Safety valves on the low-temperature hot-water side are compulsory on all Acer 2 ULN installations. Their role is to prevent system pressure from rising above the maximum allowable working pressure, thereby protecting pipework, heat exchangers and ancillary equipment from over-pressure incidents. It is the system designer's or installer's responsibility to select, size and install these valves in accordance with the national standards ensuring correct set pressure, sufficient discharge capacity and proper discharge piping.

5.3.2 Bursting Disc

In addition to the required safety valves and pressurization equipment of the LTHW system it is strongly recommended that a bursting disc is installed to the system to protect the system from increase in pressure from the high- pressure CO_2 system should the plate heat exchanger fail.

CO_2 refrigerant within the heat pump operates at 100-120 bar, protection for plant and equipment on the LTHW side of the system is advised to mitigate any sudden variations in pressure.

Burst Discs consist of a thin membrane which is designed to break and open when the specific level of differential pressure rises above the resistance limit that the disc was originally calibrated for, so as to allow for the excess pressure to vent out safely.

System configuration, plant locations and servicing routes will need to be considered when locating the burst disc on the system. It is therefore the responsibility of the designer/installer to specify the type and location. On multiple Acer installations one burst disc on the common primary pipework maybe deemed sufficient.

Burst discs are designed to be installed between two flanges. Please refer to manufactures instructions for installation information.

5.4 Frost Protection

To prevent freezing of the water circuit, a frost protection strategy is implemented in all Clade units without internal circulating pumps. The primary circulating pump is enabled when all three of the following conditions are simultaneously met: ambient temperature falls below 4 °C, the unit flow sensor (P11) reads below 10 °C, and the unit return sensor (P12) reads below 10 °C. Once active, frost protection will terminate when any one of the following conditions is satisfied: ambient temperature rises above 6 °C, P11 exceeds 12 °C, or P12 exceeds 12 °C. This control logic assumes that heat is available within the external pipework from trace heating, which must be designed, installed, and maintained by the system designer/contractor.

Trace Heating Responsibility: Clade does not supply or control external trace heating. It is the designer's responsibility to ensure that pipework is correctly insulated and equipped with trace heating to maintain minimum fluid temperature during periods of low ambient conditions or unit inactivity.

When Primary Pumps Are Not Controlled by Clade:
If the primary pump(s) are controlled by an external BMS or by-site strategy, Clade cannot guarantee frost protection of the unit. In this scenario, the BMS designer must ensure that the pumps are enabled in synchronisation with the frost thresholds defined above or provide an equivalent strategy to maintain water temperatures above 7 °C. Failure to run the pumps as described may result in localised freezing of the heat exchanger and external pipework, potentially causing permanent damage. Such damage is outside the scope of Clade warranty

6 Unit Installation

6.1 General Installation notes

6.1.1 Site Selection Criteria

Access and Maintenance

- Select a location that provides safe and unobstructed access for commissioning, routine maintenance, and emergency intervention
- Maintain the minimum clearances specified,1200mm around the electrical side, 1000mm around the water side,500mm in front and 6000mm above the unit Ensure the electrical panel access face has sufficient clear space for safe door swing and working distance in accordance with BS 7671:2018.

Airflow

- Avoid siting in corners, against tall walls, beneath overhangs, or in recesses where discharge air can stagnate or recirculate back to the evaporator inlet. Air recirculation causes the unit to reduce output and efficiency and potentially triggering high-pressure faults
- Avoid locations subject to strong prevailing winds directed at the evaporator face – wind pressure can impede fan operation and cause unpredictable airflow patterns across the coil
- Where multiple units are installed in an array, refer to Section 2.5 for array spacing requirements to prevent inter-unit recirculation
- Keep the evaporator coil free from debris accumulation such as leaves, litter, and windblown material will progressively block the coil face, reducing airflow and performance. Consider the proximity of vegetation at maturity, not at the time of installation.

Environmental

- Avoid flood-prone areas. Where flood risk cannot be eliminated, raise the unit on a plinth of sufficient height to keep electrical connections and the refrigerant circuit above the maximum credible flood level
- Account for maximum anticipated snow depth at the installation location, the unit must remain accessible, and the evaporator airflow path must remain unobstructed under maximum snow conditions. Where significant snowfall is expected, provide adequate plinth height and consider snow guards or baffles
- Avoid siting near sources of contaminated air such as chimneys, flues, cooling tower discharge, vehicle exhausts, or industrial emissions. Contaminated intake air will degrade coil performance and may cause accelerated corrosion of the aluminium fins and copper coil
- Consult the unit's declared sound power level (dB A) in the technical specifications. Use this to model expected sound pressure levels at neighbouring facades and property boundaries.
- When the unit is close to a coastal or saline environment , Blygold coating of the evaporator is suggested in order to protect the evaporator from corrosion.

Utilities & Drainage

- Confirm that electrical connection runs do not exceed the maximum allowable distance specified by the manufacturer.
- Provide a dedicated condensate drainage system to prevent standing water beneath the unit.
- Ensure water from the unit can be drained properly at all times.

Security & Safety

- If there is a risk of unauthorised access (children, vandalism, wildlife), install appropriate barriers or fencing.
- This unit is designed for outdoor installation only and must not be enclosed indoors.
- Do not install adjacent to open flame sources, gas fired plant flues, or equipment that generates sparks or sustained ignition sources at low level
- The refrigerant leak detection and ventilation fan fitted within the unit are active safety measures ensure the ventilation outlet is not obstructed and that the discharge from the ventilation fan cannot be directed towards an ignition source
- Ensure the installation location provides adequate natural ventilation at low level in accordance with EN 378-3. The unit must not be installed in a fully enclosed plant room without specific ventilation provision assessed against the R290 charge quantity.

Adherence to these guidelines will ensure safe installation, effective airflow, and long-term reliability of the outdoor unit

6.1.2 Structural Requirements

- Concrete bases are the preferred foundation type, providing stable, level support and effective mass for vibration damping
- All support points must be verified as level before the unit is positioned. An unlevel installation increases vibration, causes uneven loading on the frame, and may affect oil return in the compressor.
- The foundation must be structurally capable of supporting the unit operating weight. For roof installations, verify that the roof structure supports both the unit operating weight and the additional maintenance load.
- Separate the unit foundation from the building structure wherever possible to limit transmission of compressor and fan vibration. This is particularly important on rooftop installations where the structure provides a direct acoustic path to occupied spaces below.
- Use the factory-provided lifting centres, do not improvise alternative lifting or fixing arrangements
- Mount the unit above ground level to facilitate condensate drainage and to reduce moisture ingress into the base frame, a minimum 150mm plinth height is recommended.

6.1.3 Minimising Vibration

The Acer 2 ULN is factory-fitted with TICO S/PA anti-vibration pad beneath the refrigeration pack base frame, internal to the housing at four corner positions. This pad, a blend of cork particles and polychloroprene acrylonitrile elastomers, 12.5mm thickness, isolates the compressor and refrigeration circuit from the unit housing, reducing structure-borne vibration transmission into the pipework and enclosure panels.

TICO S/PA (red material) must be used in all cases. Incorrect pad specification will affect the isolation characteristics and may increase vibration transmission.

Please note - Clade do not supply or install vibration mitigation solutions for our heat pumps specifically for limiting vibration transmission from the housing to the building structure. However, TICO pad is supplied within the heat pump housing.

TYPICAL PROPERTIES

Tensile Strength	2.1 MN/m^2	Tested in accordance with BS 903
Elongation at Break	50%	
Hardness	$69 + 5^0$	IRHD
Thermal Conductivity	0.1 0.7	W/m^0C Btu x in/ft^2 x h x ^0F
Damping Factor	0.1	
Co-efficient of Friction	0.65 0.5	TICO to concrete TICO to bright mild steel
Temperature Range	-40° to +100° C	TICO S will operate satisfactorily over the indicated range and is suitable for both arctic and tropical climates
Maximum Load-bearing Capacity	0.5 MN/m^2	TICO S will withstand very high dynamic and static loads without physical breakdown. In machinery mounting applications, the recommended max. static load should not be exceeded without consultation.

Figure 1 – Tico Pad Specification

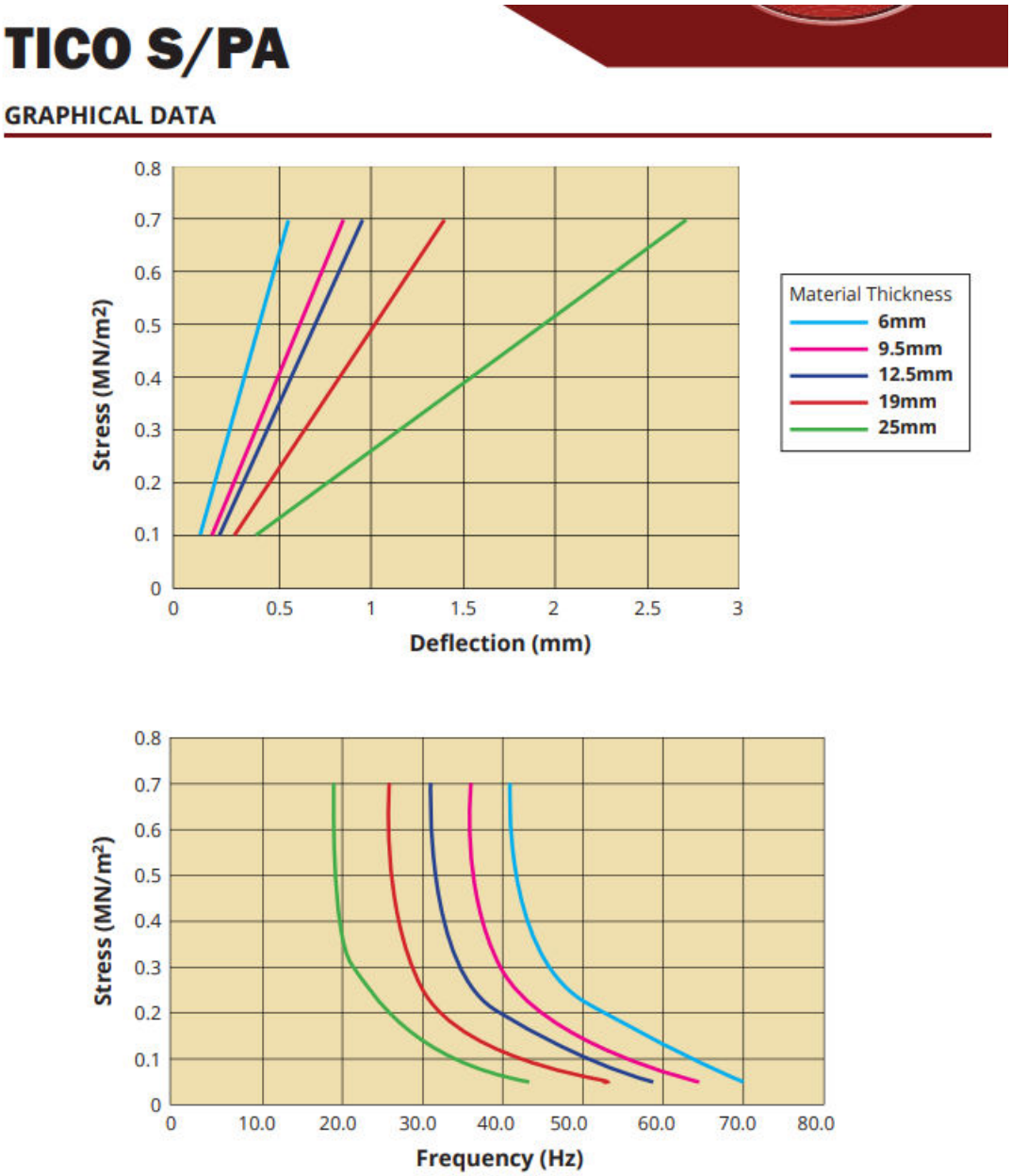

Figure 2 - Tico Pad Performance Curves

Please note that Tico S/PA MUST be specified in all cases. This is the red Tico material.

If Tico pad is used externally, the Tico pad supplied MUST be the same width as the width of the support channel to mitigate bending of the support channel and structural damage to the heat pump housing. Clade would recommend an S/PA pad with thickness 12.5mm (see above for further details) and these are to be in the corners of the heat pump between the support channels and the concrete or mounting structure.

Flexible connections must be fitted on all water pipework connections at the unit – refer to Section [5.1]. Do not rigidly fix pipework to the unit housing.

6.1.4 Charging lines

Where heat pumps are installed at roof level, ensure that dedicated charging lines are provided. These lines must allow for safe and efficient charging of refrigerant, either during commissioning when pre-charging is not feasible, or for subsequent top-ups during maintenance. The charging lines should be easily accessible from ground or plant level, designed to minimise pressure drop, and clearly identified to avoid confusion with other services.

6.1.5 Pressure Relief Valve Refrigerant Side

PRVs are included on the refrigerant loop within the unit.

WARNING: Do not cap, plug, or restrict the outlet of any refrigerant PRV under any circumstances. Blocking a PRV discharge creates a risk of catastrophic pressure vessel failure. Any evidence of PRV discharge must be investigated immediately, do not simply replace or reset the heat pump or the PRV without identifying and resolving the root cause of the over-pressure condition.

6.1.6 Condensate

The Acer 2 ULN produces significant volumes of condensate during defrost cycles in heating mode. Condensate drainage must be designed and installed before commissioning.

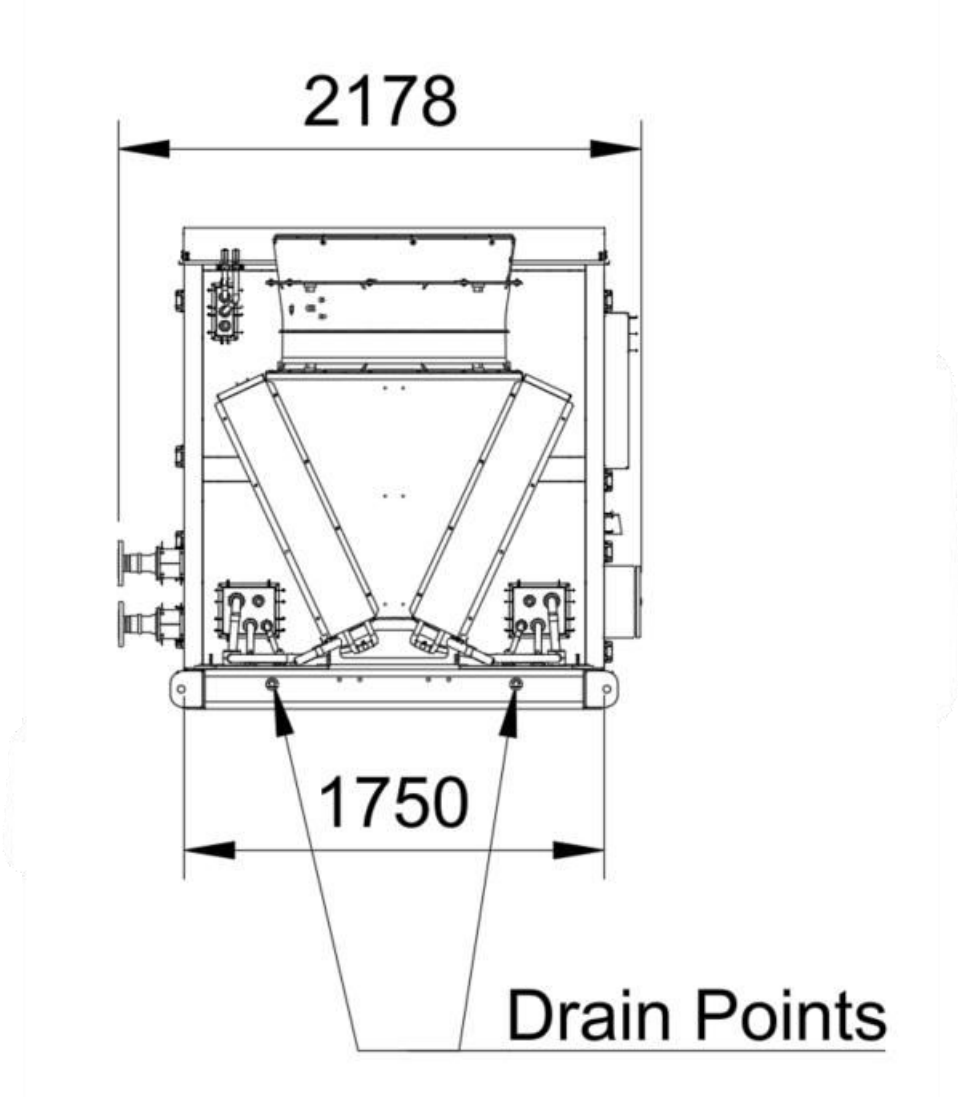

- Route condensate away from pedestrian areas, vehicle access routes, and building entrances where pooling water could freeze and create a slip hazard
- Install a continuously falling drainpipe from the unit drain point, do not create traps or horizontal sections where water can pond and freeze within the pipework
- In locations where ambient temperatures regularly fall below 0°C, fit self-regulating trace heating cables to the condensate drain pipework to prevent ice blockage.
- Where the unit is on a roof, confirm the roof drain capacity is sufficient to handle defrost condensate volumes in addition to rainfall, defrost cycles can produce substantial water volume in a short period during cold weather operation

6.1.7 Freezing Prevention

All external water pipework must be protected against freezing. Failure to provide adequate freeze protection will cause damage to the plate heat exchangers, pipework, and ancillary components, this damage is not covered under the manufacturer's warranty.

The following measures must be implemented:

Glycol dosing: The system water circuit must be dosed with inhibited propylene glycol at a concentration providing frost protection to a minimum of −10°C, or to the minimum expected ambient temperature at the installation location plus a 5°C safety margin, whichever gives the lower freeze point

Trace heating: Self-regulating trace heating cables must be installed beneath the insulation on all external water pipework exposed to ambient temperatures below 0°C. Cables must be rated to maintain fluid temperature above 0°C at the minimum design ambient temperature of −25°C. Select self-regulating cable type, fixed-output cables create hot spots and may overheat insulation. Verify cable performance under worst-case conditions after commissioning.

Pump failure protection: In the event of circulating pump failure, the system will lose the heat input that prevents freezing during cold ambient conditions. A pump failure alarm must be connected to a BMS or monitoring system capable of alerting site personnel or a remote monitoring service. Where the system may remain unattended for extended periods in cold weather, a drain-down and isolation procedure must be established and documented.

6.2 Water quality

6.2.1 General Requirements

The water quality of the system directly affects the service life of the plate heat exchangers, circulating pump, PICV actuators, and all other water-side components. Poor water quality is one of the most common causes of premature heat exchanger fouling, corrosion, and component failure, none of which are covered under the manufacturer's warranty.

The system must be maintained in accordance with BSRIA BG 50/2021 (Water Treatment for Closed Heating and Cooling Systems) and BS 8552 throughout its operational life. Water quality must be verified at commissioning and checked at every annual service. Records of water quality test results must be retained on site.

6.2.2 New Systems

Before commissioning any new installation, the entire water circuit must be thoroughly flushed to remove installation debris including weld spatter, flux residue, jointing compounds, mineral oils, pipe preservatives, and swarf. Failure to flush adequately will result in debris entering the plate heat exchangers and PICV valves, causing fouling, blockage, and damage. After flushing, drain and refill with clean mains water dosed with the correct inhibitor and glycol concentration

6.2.3 Existing Systems

When connecting the Acer 2 ULN to an existing system, or when replacing an existing heat source, the condition of the system water must be assessed before the unit is connected. Connecting to a contaminated system will void the warranty.

- Obtain a water sample from the existing system and test against the parameters in Section 6.2.7 before proceeding
- Drain and flush all existing pipework before installing the new unit – flush each section of the system separately, paying particular attention to low-flow areas such as dead legs, bypass circuits, and the bases of vertical risers where sludge accumulates
- Where the existing system contains significant magnetite sludge, indicated by black discolouration of the sample water a full power flush is mandatory before connection. Consider whether the existing system condition warrants replacement of heavily corroded sections of pipework before connecting the new unit
- After flushing, refill and dose accordingly.

6.2.4 Water Filter

A minimum **30-mesh (0.6mm aperture) strainer** must be installed on the return pipework at the inlet to each Acer 2 ULN module. The strainer must be:

- Positioned upstream of the unit isolation valve so it can be cleaned with the unit isolated
- Accessible for routine cleaning without draining the system
- Cleaned after initial system fill, after the first 48 hours of operation, and at every annual service thereafter
- Inspected and cleaned more frequently during the initial weeks of operation on a new system, as heat cycling mobilises further installation debris

6.2.5 Anti-freeze Solutions

Adding antifreeze increases system pressure drop and only inhibited (non-corrosive) glycol compatible with the circuit should be used. Do not use different glycol mixtures (i.e. ethylene with propylene).

% PROPYLENE GLYCOL BY WEIGHT	5%	10%	15%	20%	25%	30%	35%	40%	45%	50%
Freezing temperature (°C)	-1.6	-3.3	-5.1	-7.6	-9.6	-12.7	-16.4	-21.1	-27.9	-33.5
Safety temperature (°C)	-7.0	-8.0	-10.0	-13.0	-15.0	-18.0	-21.0	-26.0	-33.0	-39.0

6.2.6 Minimum Water Quality Requirements for Acer 2 ULN Units

The system water must be maintained to BS 8552 throughout the operational life of the installation. Poor water quality is one of the most common causes of premature heat exchanger degradation, corrosion, and fouling all of which will void the product warranty if found to be the root cause of a fault. Parameters must be tested at commissioning and at every annual service interval using calibrated test equipment. All results must be recorded and retained on site for inspection.

Standard Parameters

Parameter	≤ 60°C System	> 60°C System
pH (at 25°C)	7.0 - 8.0	7.0 - 8.0
Electric conductivity (µS/cm at 25°C)	300 or less	300 or less
Chloride ion (mg Cl/L)	50 or less	30 or less
Sulfate ion (mg SO_4/L)	50 or less	30 or less
Acid consumption – pH 4.8 (mg $CaCO_3$/L)	50 or less	50 or less
Total hardness (mg $CaCO_3$/L)	70 or less	70 or less
Calcium hardness (mg $CaCO_3$/L)	50 or less	50 or less
Ionic silica (mg SiO_2/L)	30 or less	30 or less

Reference Parameters

Parameter	Recirculating water	Make-up water
Iron (mg Fe/L)	1.0 or less	0.3 or less
Copper (mg Cu/L)	1.0 or less	1.0 or less
Sulfide ion (mg S^{2-}/L)	Not to be detected	Not to be detected
Ammonium ion (mg NH_4^+/L)	0.3 or less	0.1 or less
Residual chlorine (mg Cl/L)	0.25 or less	0.3 or less
Free carbon dioxide (mg CO_2/L)	0.4 or less	4.0 or less
Ryznar Stability Index	To be assessed	To be assessed

6.3 Lifting Centers and Structural Loading Points

6.3.1 Structural Loading Points

The Acer 2 ULN must be supported at the designated structural loading points only. These are indicated in blue on the drawing below and correspond to the reinforced sections of the base frame where the unit's operating weight is intended to be transferred to the supporting structure.
Supporting steelwork or mounting frames must be designed to bear at these points specifically. Do not attempt to support the unit at any other location on the base frame. the frame sections between the loading points are not designed to carry the full unit weight and may deform under load, causing misalignment, increased vibration, and potential structural damage to the unit housing.

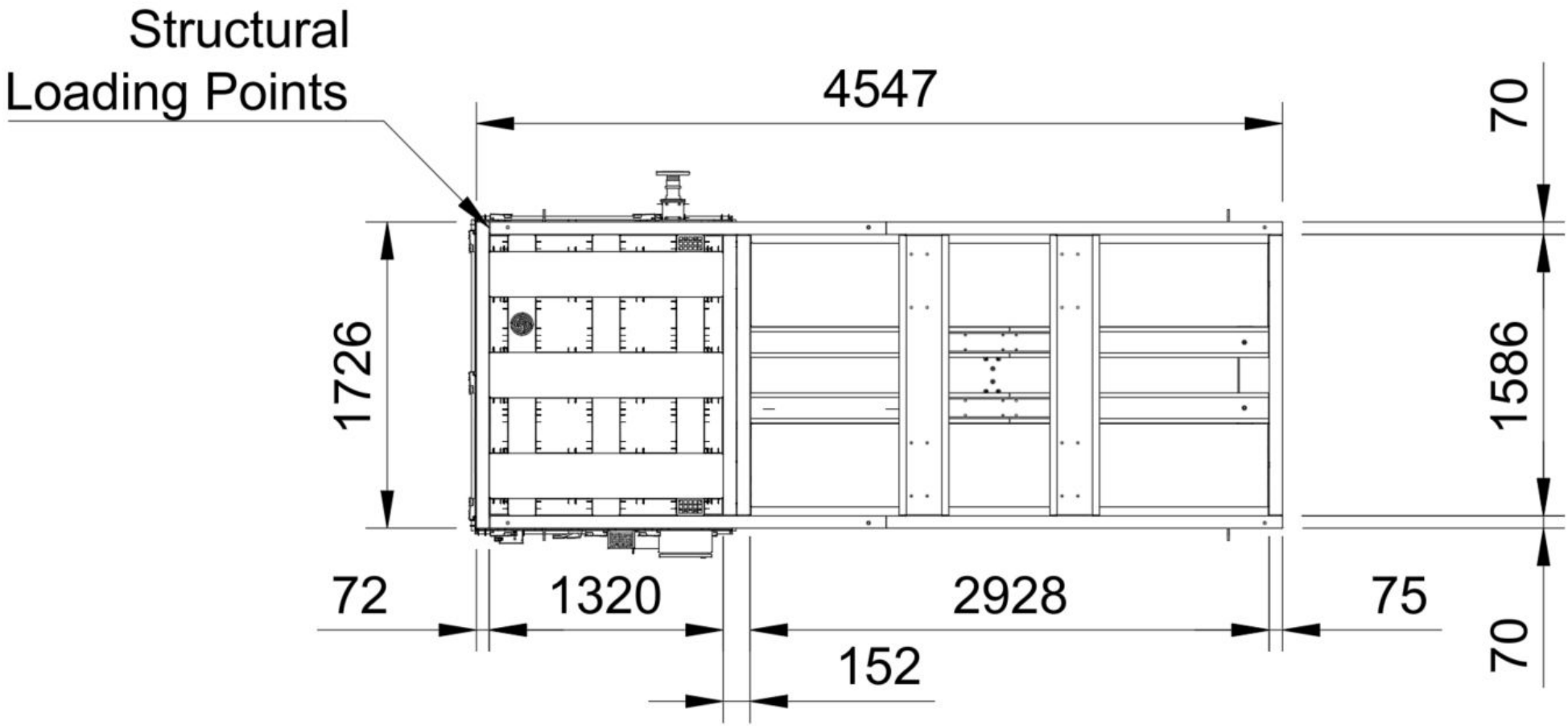

6.3.2 Lifting Centers

The Acer 2 ULN has two designated lifting points located on the base frame, as shown in the drawing below. These are the only permitted lift points do not attempt to lift the unit from any other location on the frame or housing. Lifting must be carried out using Fork Trucks or Lifting straps. Forks must be inserted through the two lifting point apertures in the base frame. Lifting straps must pass through the two lifting point apertures and be rated for the full unit weight with the appropriate safety factor applied

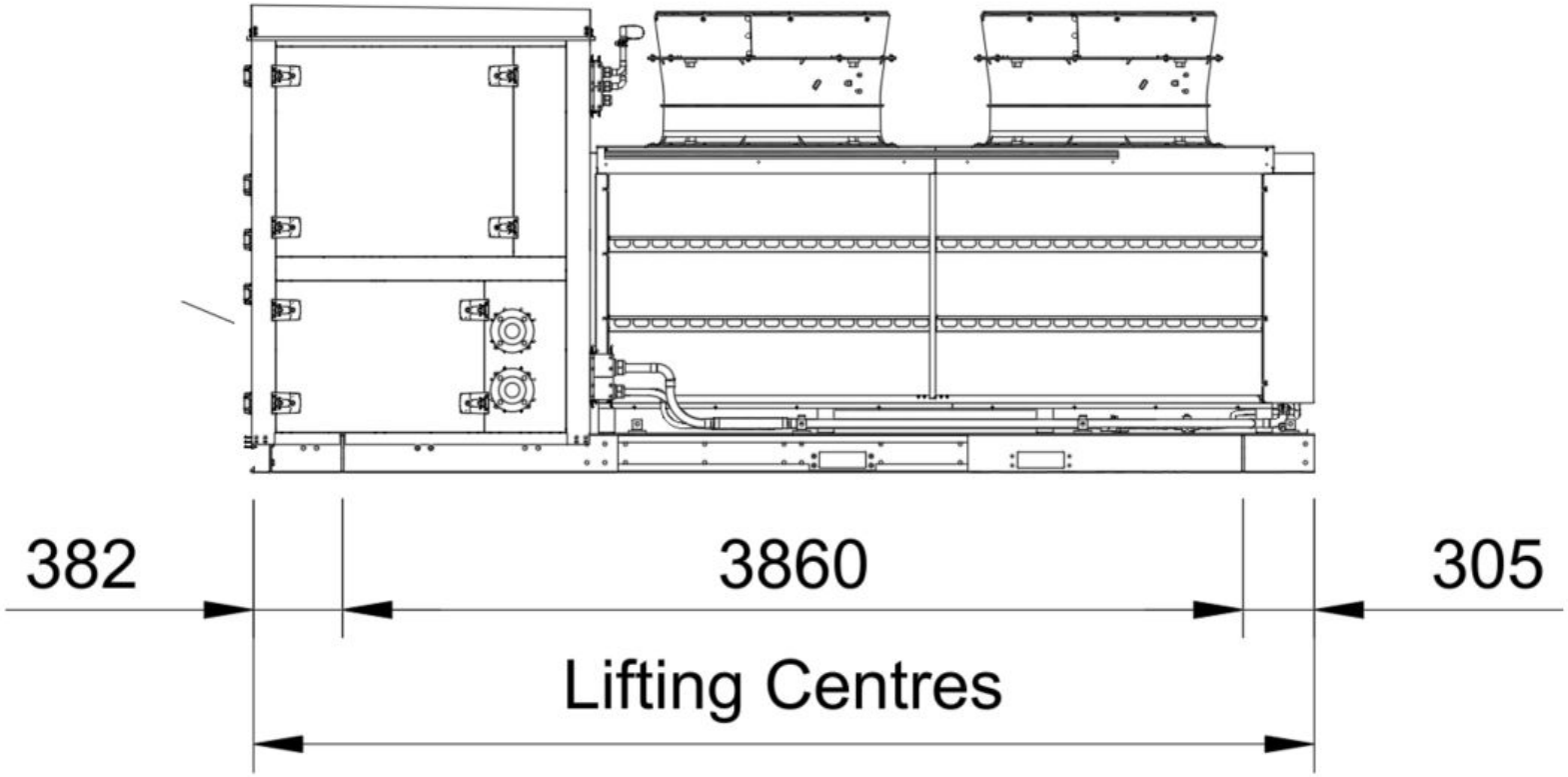

6.4 Maintenance and Serviceability

6.4.1 Maintenance Requirement

The unit requires planned preventative maintenance at a minimum interval of six months, with a full annual service. Maintenance must be carried out by an engineer competent in the refrigerant concerned, and is a condition of the Clade product warranty. Records must be kept and produced on request.

The full scope of works, competence requirements and evidence requirements are set out in the installer manual. This section addresses the provisions the designer must make so that the required maintenance can be carried out safely and without disruption to the installation. The Clade product warranty is conditional upon the unit being maintained in accordance with the installer manual and upon that maintenance being evidenced. Clade will not accept warranty liability for failures caused by, or contributed to by, a failure to maintain – including fouled coils, blocked strainers, low flow, deterioration of water quality, loss of inhibitor or glycol concentration, encroachment on the stated clearances, or untested gas detection and ventilation provision.

7 System Configuration

7.1 System Schematics

The unit must be installed in a configuration that allows correct hydraulic balance between primary and secondary systems. It is recommended that a buffer vessel is installed in the following configuration, allowing each system to operate independently at different flow conditions.
It is important that the secondary system is designed to operate at the correct flow and return temperatures. For detailed schematics please refer to Clade's Schematic Pack document.

The Acer 2 ULN can be used for heating and DHW applications and combined systems.
Buffer temperature sensors can be used to modulate heat pump output, see Section 8 for further details of controls.

7.1.1 General Arrangement Heating Mode

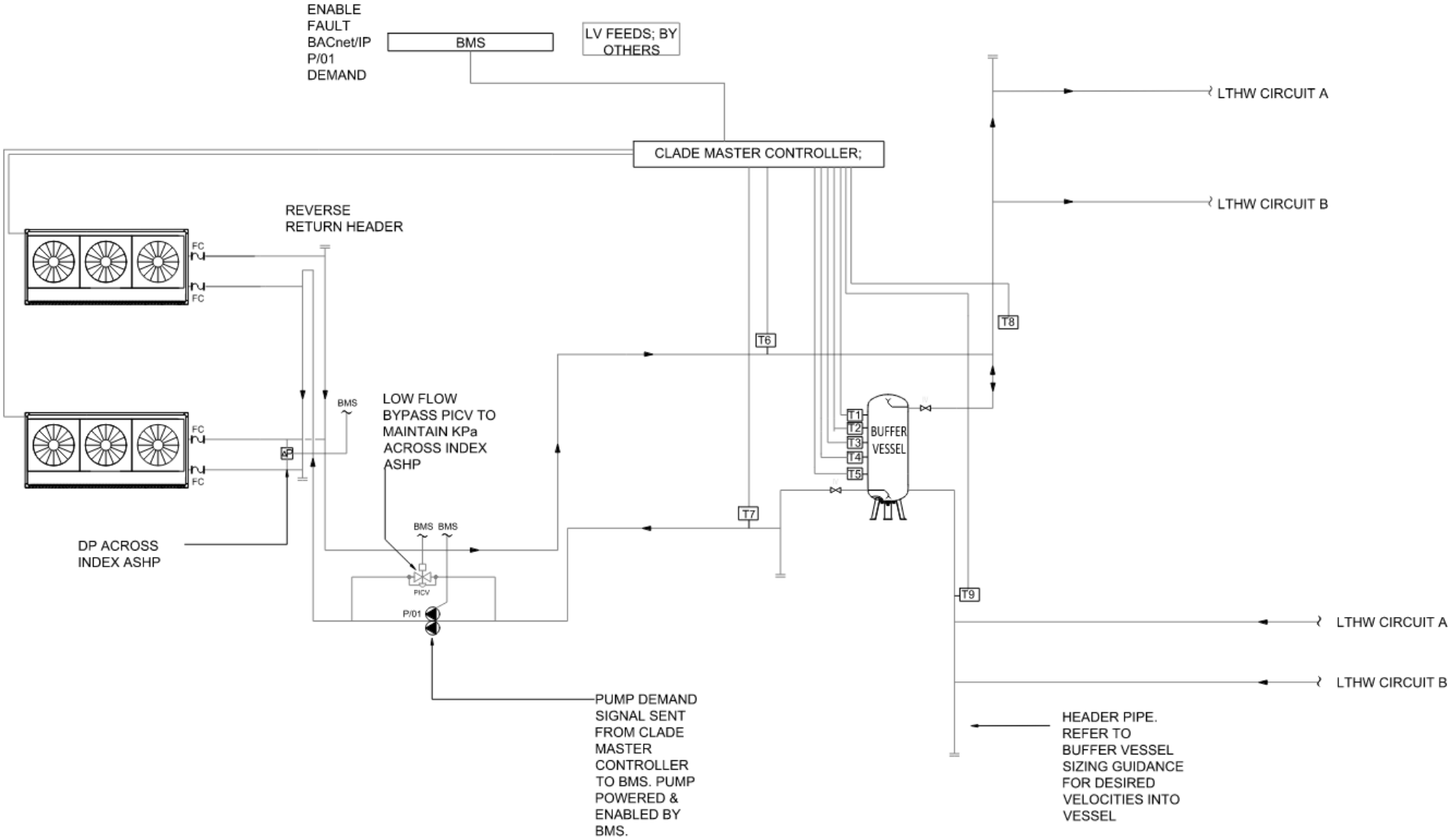

7.1.2 ASHP Shunt Pump and Low flow Bypass

The primary ASHP shunt pump can be controlled via an enable via the Clade controller (option A) or via the BMS (option B) with an enable from the Clade controller. Option B is mandatory for twin-head duty/standby or duty/assist pump sets, as the Clade controller provides only one enable output and cannot manage automatic head change-over:

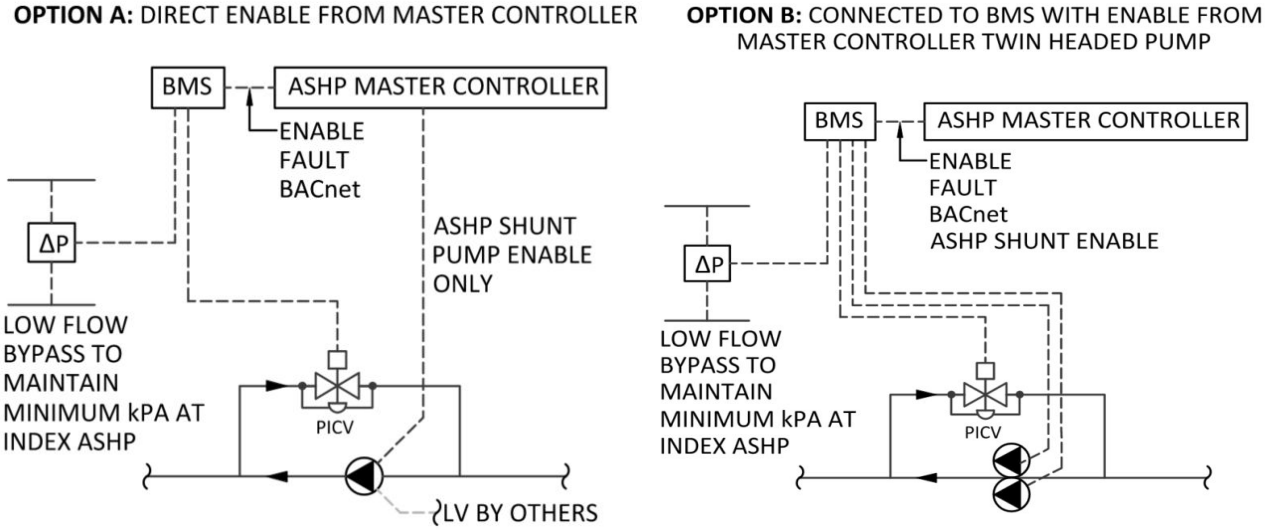

Please note: Pump motor power circuits shall be provided, protected and wired by others; the Clade controller supplies control signals only.

The primary circulation pump shall be fitted with a dedicated low-flow bypass loop incorporating a pressure-independent control valve (PICV) sized based on the system's minimum bypass flow requirement. This configuration ensures that, under minimum pump speed and flow conditions, the hydraulically most distant air-source heat pump module still experiences the requisite ΔP and volumetric flow rate for stable operation at its lowest modulation point.

.

8 Controls

8.1 Controls Overview

8.1.1 Off/On Switch

The Off/On switch selects the operation of the heat pump. Selecting the on position will start the heat pump. Selecting the Off position will instigate a stop sequence and stop the heat pump from running. The heat pump will continue to run for a short period until it has completed the stop sequence.

⚠ CAUTION

The Off/On switch should not be used in an emergency. Any emergency isolation should be carried out at the local isolator.
The inverter should be fully discharged, prior to removal of the compressor terminal box cover.

8.2 Control Type

Three methods of system-level control are available:

- BMS control
- Clade Buffer Controller
- Local Control

These will be described in the following sections.

8.3 Clade Buffer Controller

8.3.1 Control

The Clade Buffer Controller should be used when the heat pumps serve a buffer vessel and centralised system management is required. It is supplied as a standalone panel and installed in the plant room by the contractor. The controller generates a single demand signal (0–100%) and apportions it across the connected heat pumps to stage units in/out in line with instantaneous load.

The Clade Buffer Controller generates a demand signal (0–100%) and distributes it to the heat pumps via the Multi Heat Pump Controller to stage units in and out in line with the instantaneous thermal load.

The controller uses two simultaneous control targets to calculate the required capacity:

Target A - Buffer energy state.

Multi-point sensing within the buffer vessel (typical probes T1–T5) is used to estimate the vessel's usable thermal charge. An internal weighting and normalisation routine produces a Buffer Charge Index. As the vessel approaches its calibrated "full" condition (accounting for stratification), the index tapers so that additional capacity is requested progressively less aggressively.

Target B - return protection.

The controller monitors either the common heat-pump return or the lowest vessel sensor (typically T7) against a protected maximum return limit. The deviation below this limit generates a Return Temperature Assist signal via a calibrated proportional slope with built in damping. This biases capacity upward when return water is comfortably below the limit, and backs capacity off as the limit is approached.

Blending of targets

The demand signal is derived from a proprietary mapping that blends the Buffer Charge Index with the Return Temperature Assist. The resulting demand (0–100%) is divided across the available heat pumps to determine staging increments for each unit.

The strategy maintains a slight bias toward higher flow on the heat pump circuit so that hotter supply water is continuously pulled through the buffer and blended with the system return. This steadily raises the vessel's usable charge while keeping source-side returns within the safe operating envelope. If the monitored return approaches the protected limit, capacity is progressively reduced, and may be suspended, to prevent sending excessively hot water back to the heat pumps.

An optional, selectable weather compensation function is available within the controller. By progressively lowering the flow temperature in response to higher outdoor temperatures, this mode optimises seasonal efficiency and delivers higher coefficients of performance.

Clade Multi Heat Pump Controller will be installed as a standalone unit. The heat pumps will connect to the controller by CAT6 cable between the two units, installed by the contractor as below.

8.3.2 Installation

The Clade Buffer Controller is installed as a standalone unit in the plant room. All interconnections between the controller, the Multi Heat Pump Controller, buffer vessel sensors, system pump, BMS, and ancillary devices are made by the installing contractor. A site-specific wiring diagram and terminal schedule are supplied with every panel.

8.3.3 Multiplex System Network Diagram

Clade Buffer Controller

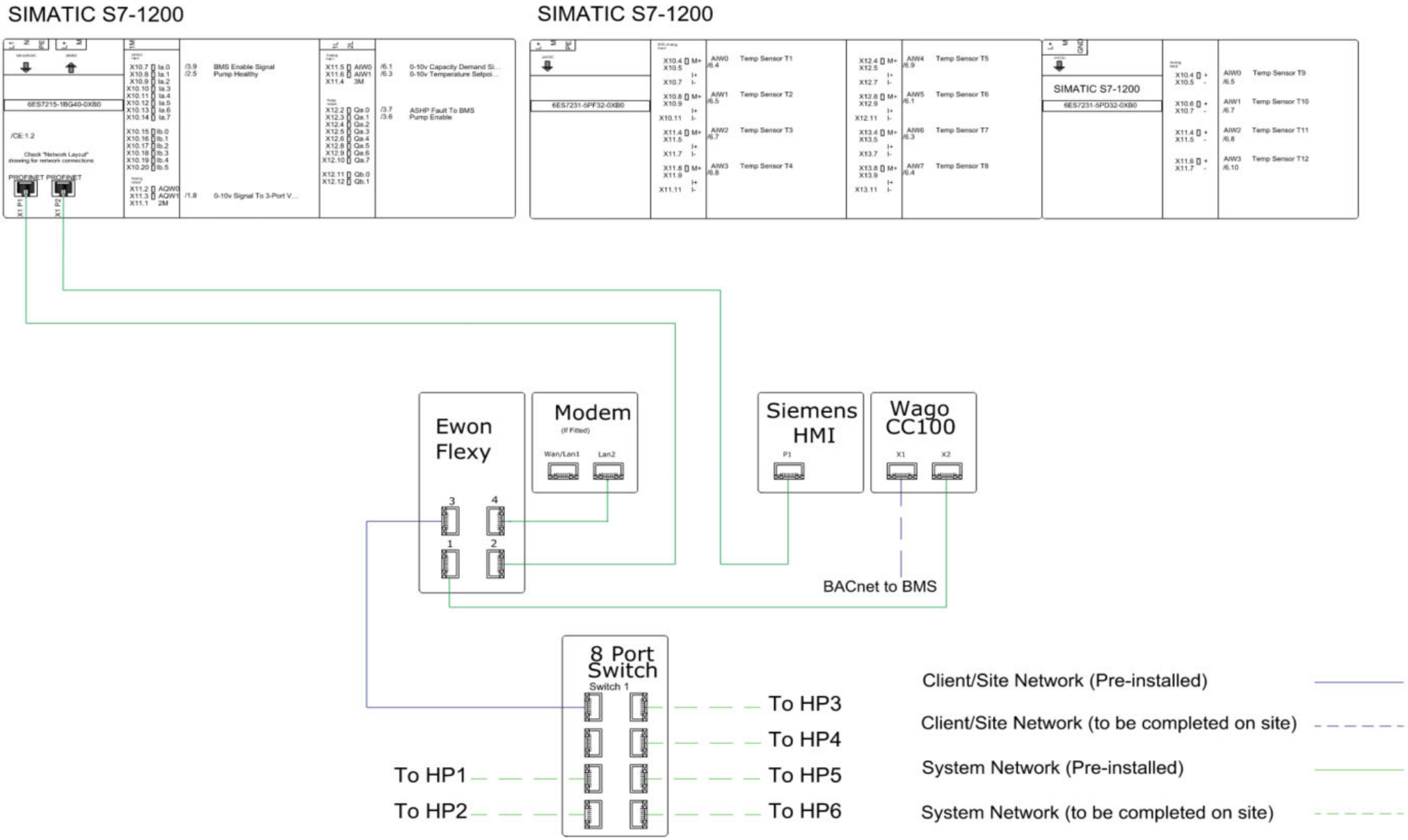

Siemens Controller

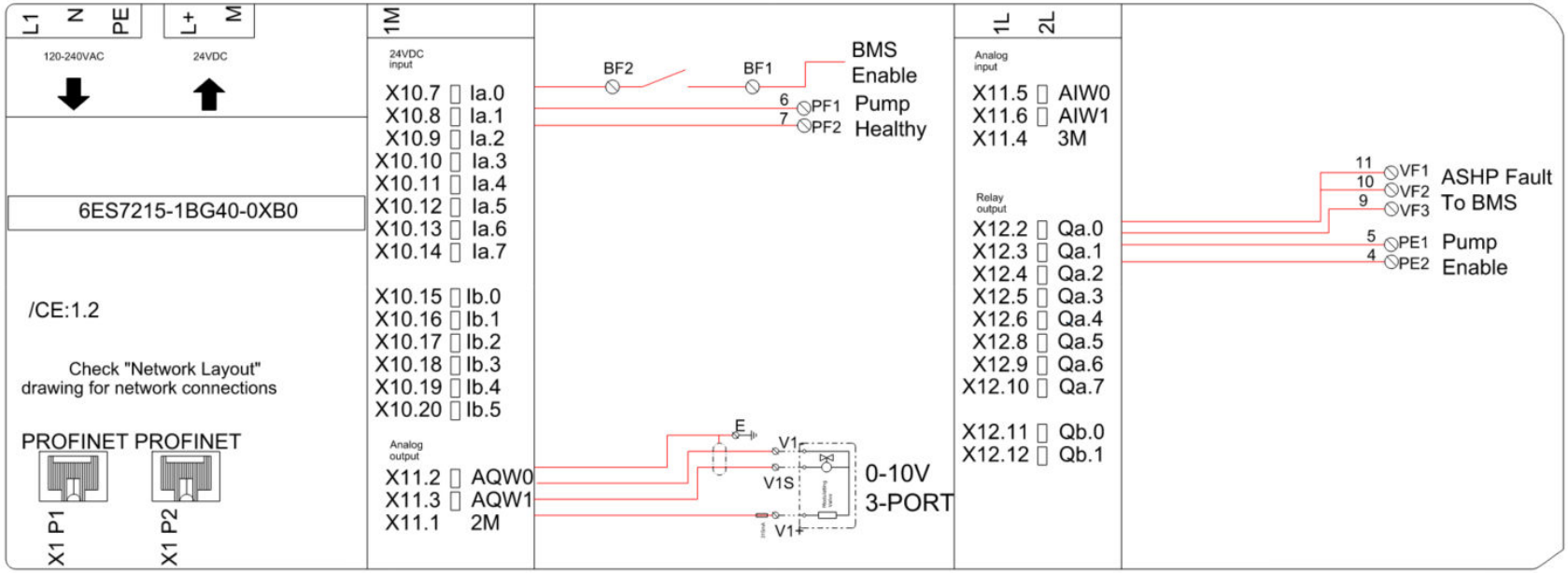

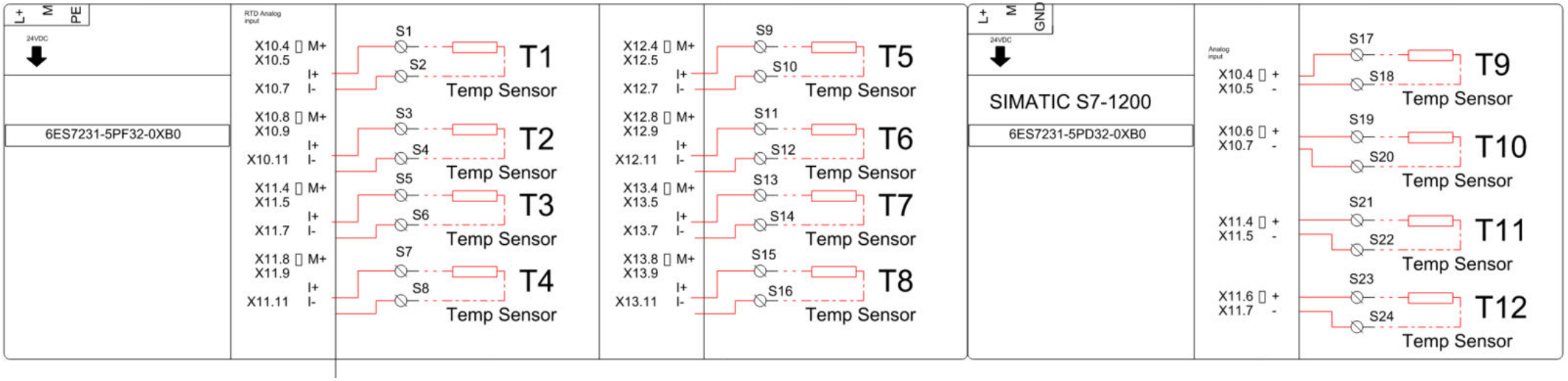

Terminal Layout

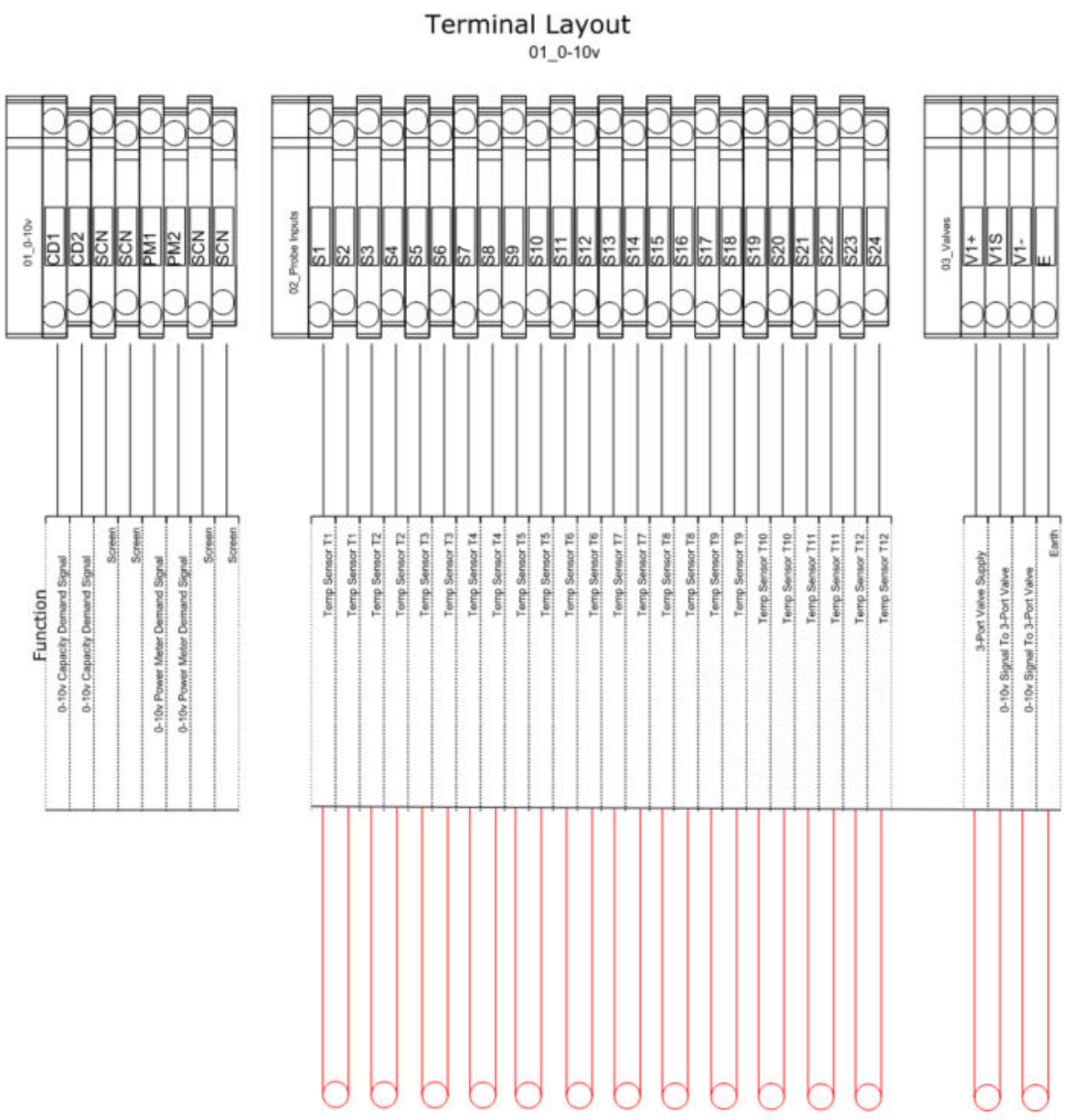

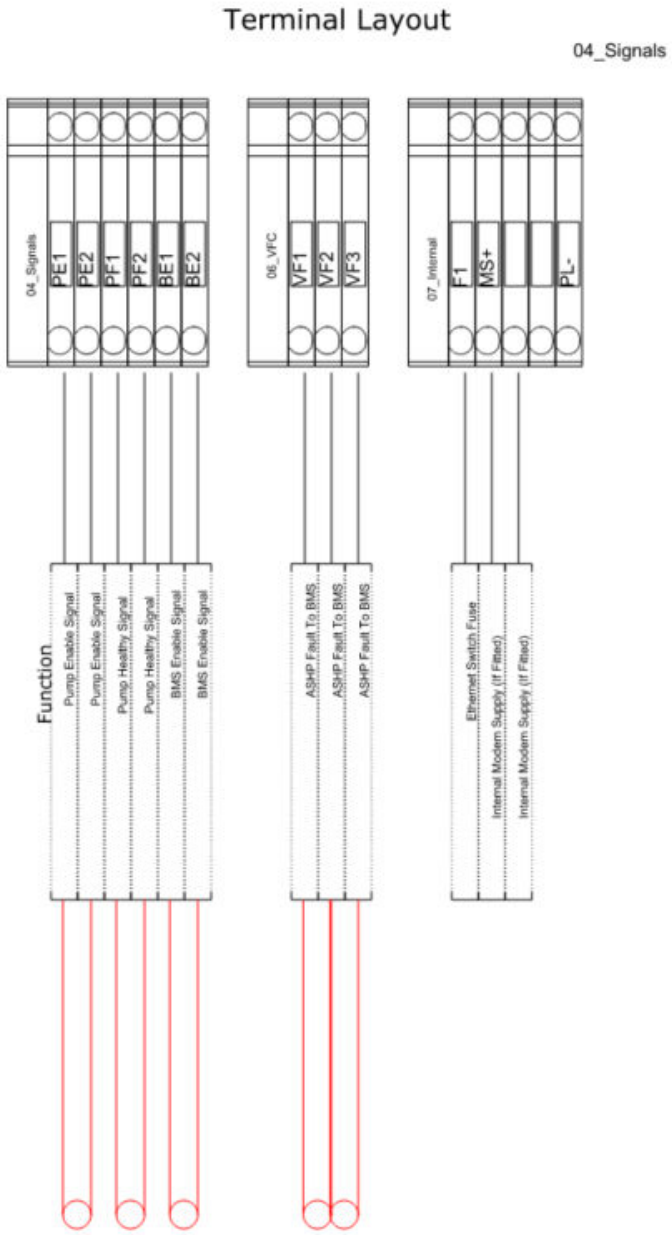

8.3.4 Heat Pump Data

A single connection to the Clade Buffer Controller is all that is required to access all connected heat pump data. If the client wishes to monitor or log this data via their Building Management System, the Clade controller can be integrated through its BACnet interface. The table below details the data points available via the BACnet connection from the Clade controller:

BACnet Register (Siemens Master)				
Device Name		Heat Pump		
Obj. Type	Object Name	Description	Unit	Read/Write
AI	obj_1	Ambient Temperature		R
AI	obj_2	Water Temperature Setpoint	°C	R
AI	obj_3	Water Return Temperature Setpoint	°C	R
AI	obj_4	Water Average Temperature	°C	R
AI	obj_5	Water Average Return Temperature	°C	R
AI	obj_6	System Heating Kilowatts	Kw	R
AI	obj_7	Coefficient Of Performance (Heating)	COPH	R
AI	obj_8	Buffer Temperature	°C	R
AI	obj_9	HP1 Average Water Temperature	°C	R
AI	obj_10	HP1 Average Return Temperature	°C	R
AI	obj_11	HP1 Module 1 Status	*Status Table	R
AI	obj_12	HP1 Module 2 Status	*Status Table	R
AI	obj_13	HP1 Module 3 Status	*Status Table	R
AI	obj_14	HP1 Module 4 Status	*Status Table	R
AI	obj_15	HP2 Average Water Temperature	°C	R
AI	obj_16	HP2 Average Return Temperature	°C	R
AI	obj_17	HP2 Module 1 Status	*Status Table	R
AI	obj_18	HP2 Module 2 Status	*Status Table	R
AI	obj_19	HP2 Module 3 Status	*Status Table	R
AI	obj_20	HP2 Module 4 Status	*Status Table	R
AI	obj_21	HP3 Average Water Temperature	°C	R
AI	obj_22	HP3 Average Return Temperature	°C	R
AI	obj_23	HP3 Module 1 Status	*Status Table	R
AI	obj_24	HP3 Module 2 Status	*Status Table	R
AI	obj_25	HP3 Module 3 Status	*Status Table	R
AI	obj_26	HP3 Module 4 Status	*Status Table	R
BO	obj_27	Heartbeat In	Eco signal from the customer (Heartbeat IN value must be copied into Hearbeat Out value)	W
BI	obj_28	Heartbeat Out	Eco signal to customer	R
BI	obj_29	HP1 System Heat Pump Status	0=Off / 1=On	R
BI	obj_30	HP1 System Key Status	0=Alarm / 1=OK	R
BI	obj_31	HP1 Leak Detection Status	0=Alarm / 1=OK	R
BI	obj_32	HP2 System Heat Pump Status	0=Off / 1=On	R
BI	obj_33	HP2 System Key Status	0=Alarm / 1=OK	R
BI	obj_34	HP2 Leak Detection Status	0=Alarm / 1=OK	R
BI	obj_35	HP3 System Heat Pump Status	0=Off / 1=On	R
BI	obj_36	HP3 System Key Status	0=Alarm / 1=OK	R
BI	obj_37	HP3 Leak Detection Status	0=Alarm / 1=OK	R

*Status Table
0=Not Configured
1=Off
2=Running
3=Defrost
4=Standby
5=Initializing
6=Alarm
7=Satisfied
8=Leak Alarm

8.4 BMS Control

This control type must be selected when it is intended to control the heat pump from an independent BMS.

Selecting BMS will allow the heat pump to operate on a 0-10V input signal from the BMS.

The System Healthy volt-free contact signals the BMS if any heat pump has an active fault or the system is not operational.

A 0-10V signal allows the heat pump to be controlled to a desired capacity (QH) based on a percentage of maximum capacity.

NOTE: Maximum capacity will alter dependent on ambient temperatures. Therefore, the minimum QH at 2V (50%) at -5ºC will be less than the minimum capacity during times of warmer ambient conditions. When sizing and selecting buffer vessels the low demands of the building need to be considered in conjunction with minimum turn capacity of the heat pump. Published capacities at 7ºC ambient temperatures are deemed as maximum capacities.

The table below denotes the controls associated with a 0-10V signal:

Voltage Signal	Status
0-0.9	Fault
1-1.9	Off
2	Capacity Control (50-100%)
3	
4	
5	
6	
7	
8	
9	
10	

NOTE: The function will not be available when operating as a multiplex installation using the Clade controller

8.5 Local control

Selecting LOCAL control means the heat pump will control without any external control signals. This should be selected when there is no BMS 0-10V capacity control input or Clade Multi Heat Pump Controller input. Selecting this control type means the unit will operate on return temperature control.

Flow Temperature and Return Temperature Control

When the return water temperature rises into the designated delta-temperature (ΔT) range, the heat pump automatically reduces its heat output. This reduction lowers the pump's flow rate while still maintaining the desired flow temperature. Conversely, if the return water temperature drops, the heat pump's heating capacity increases, thereby increasing the flow rate to maintain a constant flow temperature.

High Return Water Condition

If the return water temperature increases further, the system will trigger a high return water stop condition. In this state, the heat pump switches to a 'Satisfied' status, indicating that the required heating has been met. The heat pump will resume its normal 'Heating' mode once the return water temperature drops enough so that the temperature difference exceeds the reactivation threshold.

CLADE

Head Office & Registered Office
Bristol & Bath Science Park, Dirac Crescent, Emersons Green, BRISTOL BS16 7FR

The Technology Centre
Unit R3 Gildersome Spur Industrial Estate, Stone Pits Lane, Morley, LEEDS LS27 7JZ